User Manual

YUNO-151& YUNO-156

Copyrights

©2014All rights reserved. The information in this document is subject to change without prior notice in order to improve reliability, design and function and does not represent a commitment on the part of the manufacturer.

This document contains proprietary information protected by copyright. All rights are reserved. No part of this manual may be reproduced by any mechanical, electronic, or other means in any form without prior written permission of the manufacturer.

All trademarks are property of their respective owners

Liability Disclaimer

In no event will the manufacturer be liable for direct, indirect, special, incidental, or consequential damages arising out of the use or inability to use the product or documentation, even if advised of the possibility of such damages.

Regulatory Information

FCC Notice

This equipment has been tested and found to comply with the limits for a Class A digital device, pursuant to Part 15 of the Federal Communications Commission (FCC) Rules. These limits are designed to provide reasonable protection against harmful interference in a residential installation. This equipment generates, uses, and can radiate radio frequency energy and, if not installed and used in accordance with the instructions, may cause harmful interference to radio communications. However, there is no guarantee that interference will not occur in a particular installation. If this equipment does cause harmful interference to radio or television reception, which can be determined by turning the equipment off and on, the user is encouraged to try to correct the interference by one or more of the following measures:

• Increase the separation between the equipment and the receiver.

• Connect the equipment into an outlet on a circuit different from that to which the receiver is connected.

• Consult the dealer or an experienced radio or television technician for help.

NOTE: THE MANUFACTURER IS NOT RESPONSIBLE FOR ANY RADIO OR TV INTERFERENCE CAUSED BY UNAUTHORIZED MODIFICATIONS TO THIS DEVICE. SUCH MODIFICATIONS COULD VOID THE USER'S AUTHORITY TO OPERATE THE DEVICE.

CE Notice

This device complies with **EMC Directive 2004/108/EC** and **2006/95/EC "Low Voltage Directive"** issued by the Commission of the European Community

WEEE Notice

The **WEEE** mark applies only to countries within the European Union (EU) and Norway.

This appliance is labeled in accordance with **European Directive 2002/96/EC** concerning **waste electrical and electronic equipment** (**WEEE**). The Directive determines the framework for the return and recycling of used appliances as applicable throughout the European Union. This label is applied to various products to indicate that the product is not to be thrown away, but rather reclaimed upon end of life per this Directive.

Safety

IMPORTANT SAFETY INSTRUCTIONS

To disconnect the machine from the electrical Power Supply, turn off the power switch and remove the power cable plug from the wall socket. The wall socket must be easily accessible and in close proximity to the machine.

Read these instructions carefully. Save these instructions for future reference.

Follow all warnings and instructions marked on the product.

Do not use this product near water.

Do not place this product on an unstable cart, stand, or table. The product may fall, causing serious damage to the product.

Slots and openings in the cabinet and the back or bottom are provided for ventilation; to ensure reliable operation of the product and to protect it from overheating. These openings must not be blocked or covered. The openings should never be blocked by placing the product on a bed, sofa, rug, or other similar surface. This product should never be placed near or over a radiator or heat register, or in a built-in installation unless proper ventilation is provided.

This product should be operated from the type of power indicated on the marking label. If you are not sure of the type of power available, consult your dealer or local power company.

Do not allow anything to rest on the power cord. Do not locate this product where persons will walk on the cord.

Never push objects of any kind into this product through cabinet slots as they may touch dangerous voltage points or short out parts that could result in a fire or electric shock. Never spill liquid of any kind on the product.

Table of Contents

Copyrights i
Liability Disclaimer i
Regulatory Information i
FCC Notice i
CE Notice i
WEEE Notice ii
Safety ii
Table of Contents iii
1. Item Checklist 1
1.1 Standard Items 1
1.2 Optional Items 2
2. System View 3
2.1 Front View 3
2.2 Rear View 4
2.3 Side View 5
2.4 Dimension 6
For YUNO-151 6
For YUNO-156 7
2.5 I/O View 8
3. System Assembly & Disassembly 9
3.1 Open the System Cover 9
3.2 Replace the Storage Disk Drive 10
3.3 Replace the Memory 13
3.4 Install the Power Adapter 15
3.5 Install the Wall-mount 16
4. Peripherals Installation 18
4.1 Install the Cash Drawer 18
4.2 Install the Attachment-type Customer Display (YUNO-VFD) 20
5. Specification 21
6. Configuration 23
6.1 X72 Motherboard 23
6.1.1 Motherboard Layout 23
6.1.2 Connectors & Functions 24
6.1.3 Jumper Settings 25
Appendix A: Driver Installation 26
Appendix B: Customer Display Command Settings 27

1. Item Checklist

1.1 Standard Items

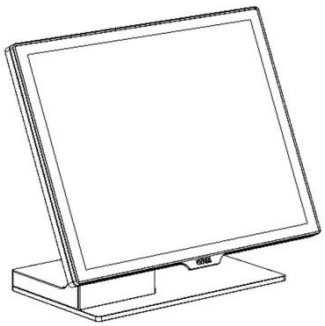	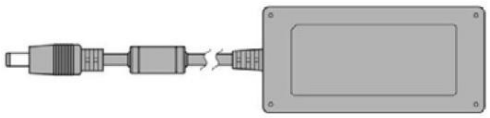
a. System	b. Power Adapter (65W)
c. Power Cable	d. RJ50-COMCable 100cm (x2), plus, RJ50-COMCable 50cm (x2)
e. Manual CD	

1.2 Optional Items

YUNO supports full range of peripherals as listed below.

Model #	Description
YUNO-VFD 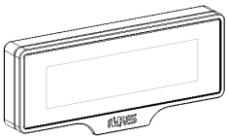	RS-232 interface Attachment-type (integrated) Customer Display
YUNO-UPS	Intelligent Uninterruptible Power Supply Module
YUNO-WBM	Wi-Fi Bluetooth Module 2.4/5GHz, 802.11ac, a/b/g, n

2. System View

2.1 Front View

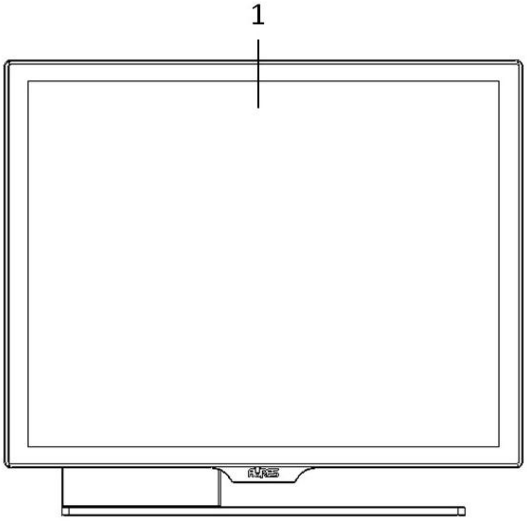

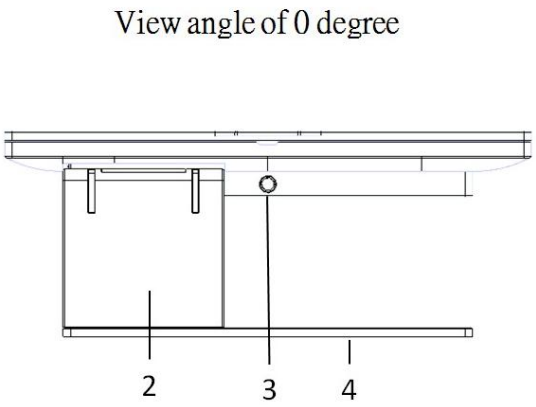

Number	Description
1	Bezel Free Panel PC
2	L-Stand
3	System Cover Release Button
4	Base Plate

2.2 Rear View

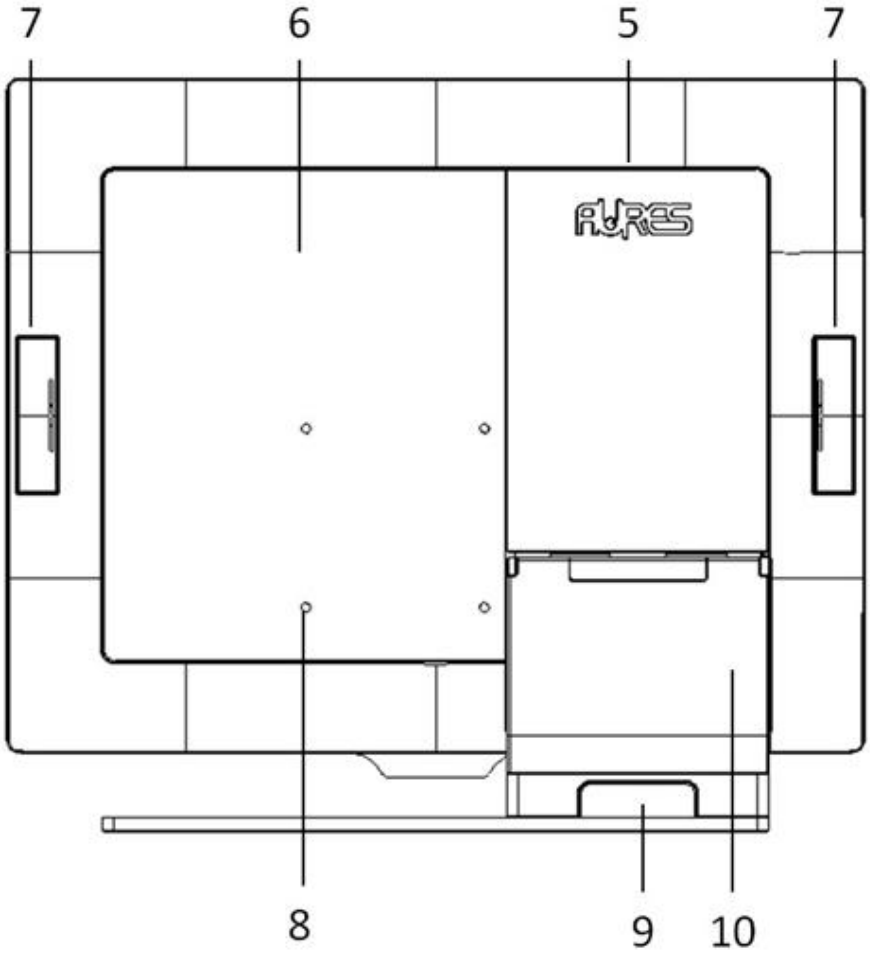

Number	Description
5	Attachment-type Customer Display (YUNO-VFD) service door
6	System Cover
7	service door for peripherals
8	VESA mount (75mm x 75mm)
9	Rear Side Cable service door
10	L-Stand Cover

2.3 Side View

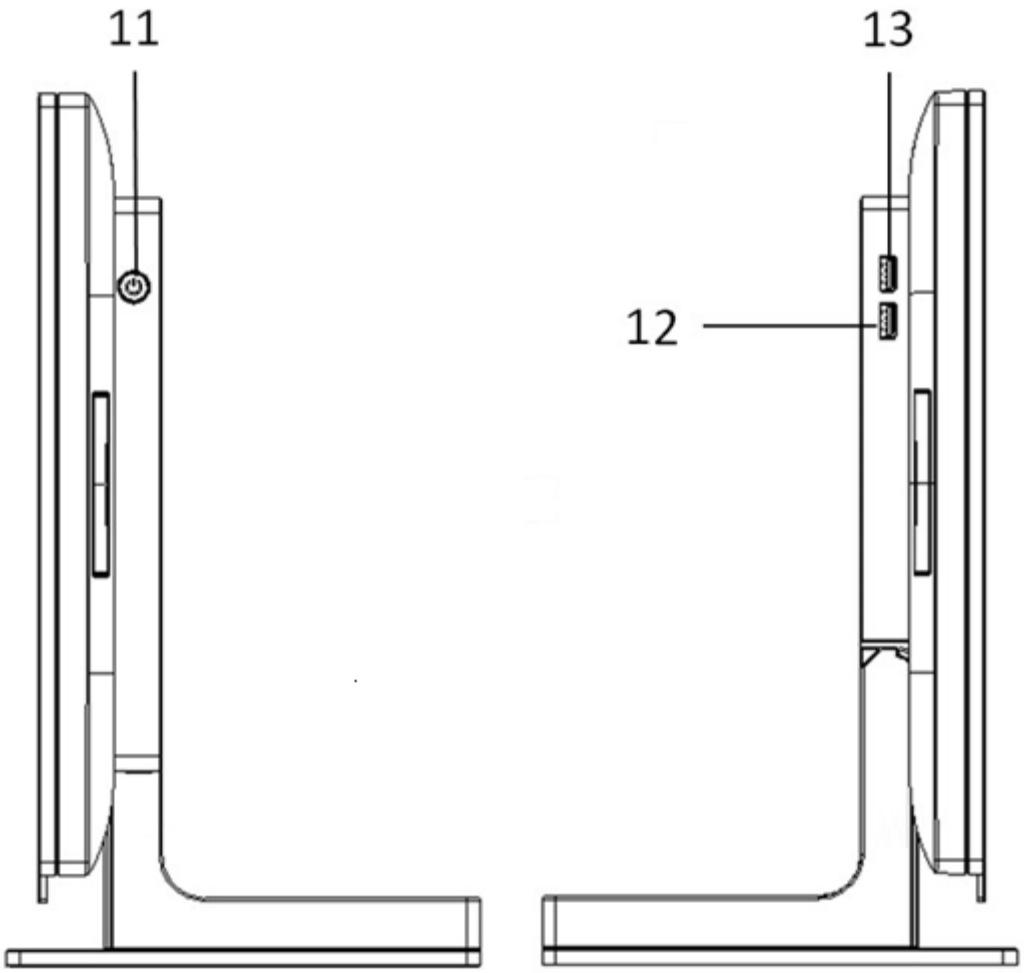

Number	Description
11	Power Button
12	1 x USB 2.0
13	1 x USB 3.0

2.4 Dimension

For YUNO-151

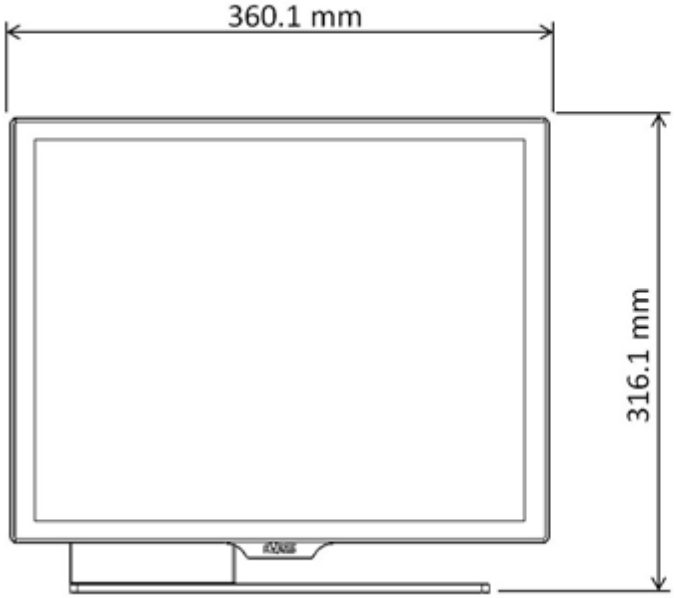

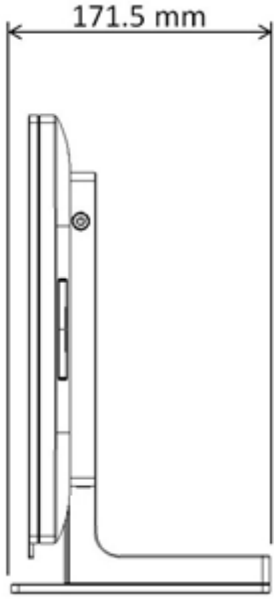

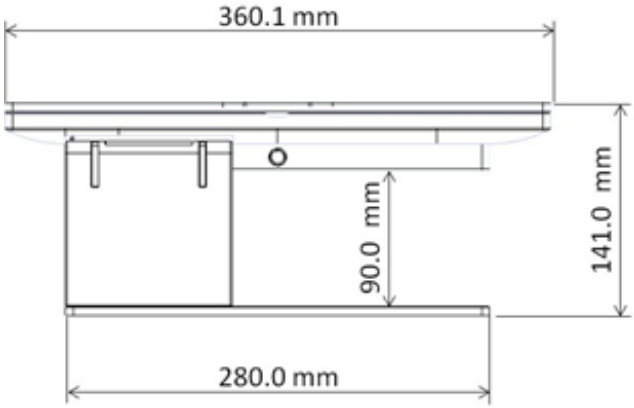

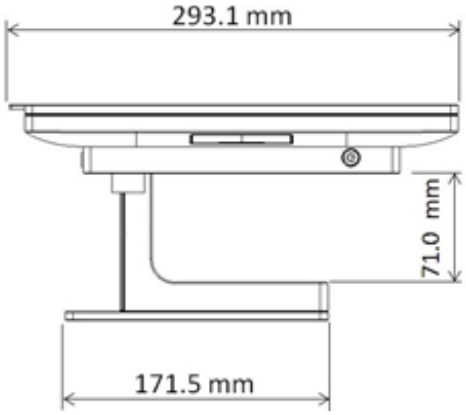

For YUNO-156

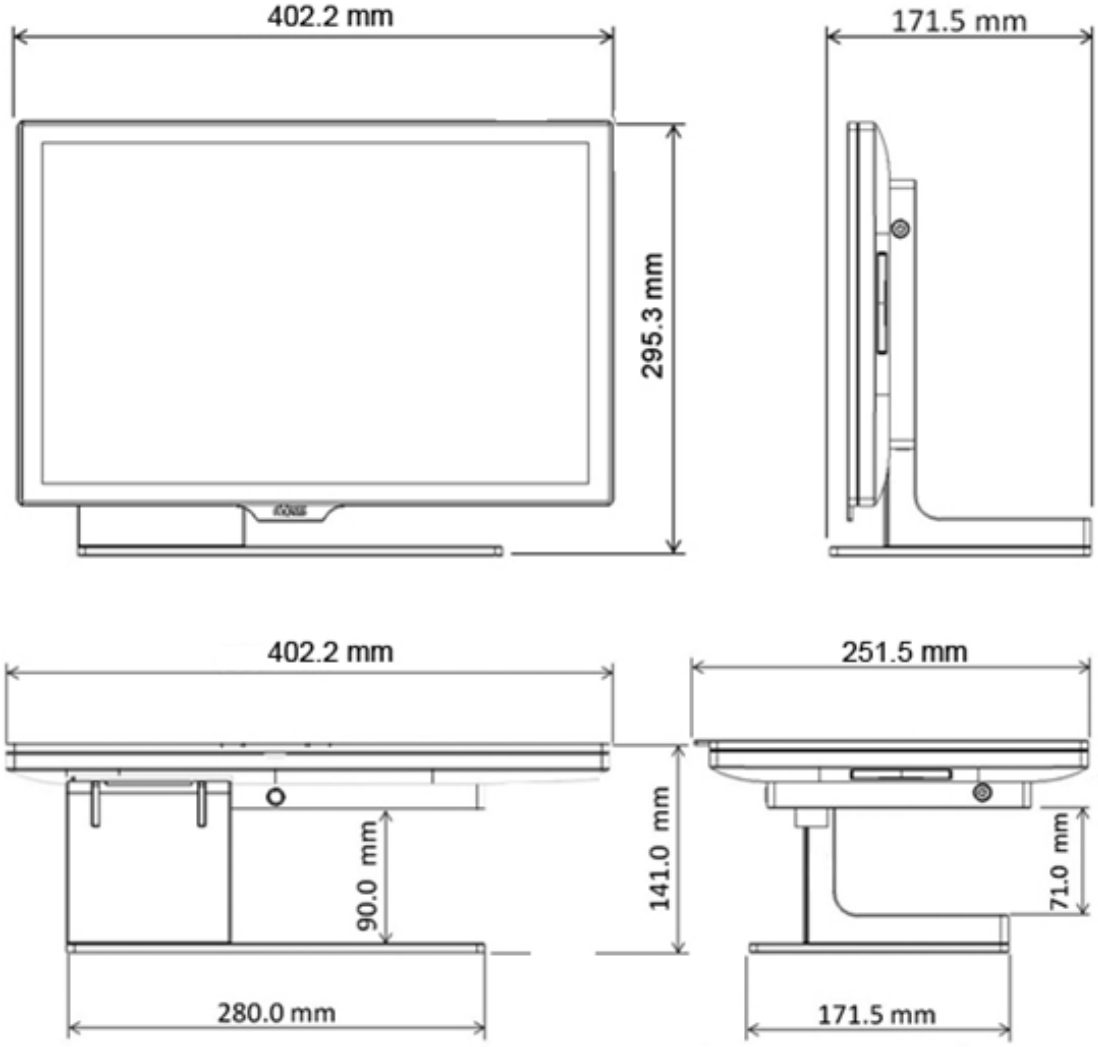
402.2 mm
171.5 mm
295.3 mm
402.2 mm
251.5 mm
90.0 mm
141.0 mm
71.0 mm
280.0 mm
171.5 mm

2.5 I/O View

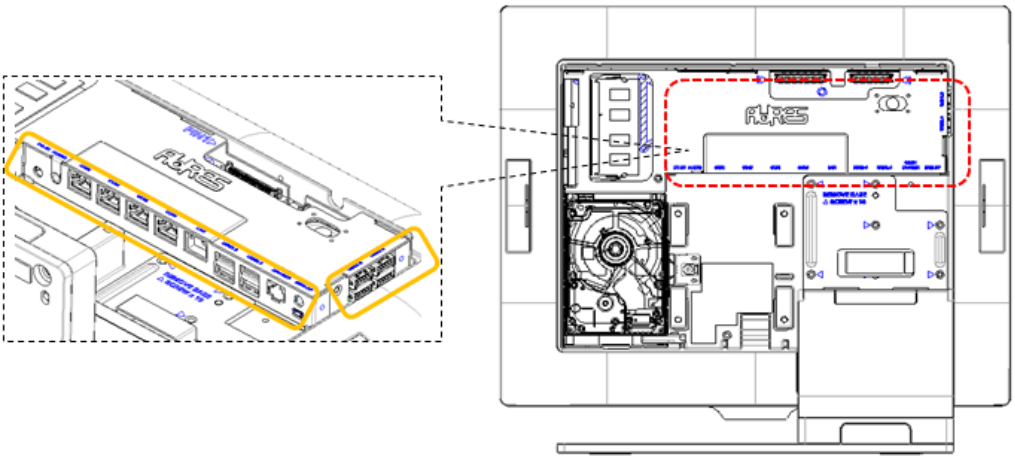

Bottom-up View

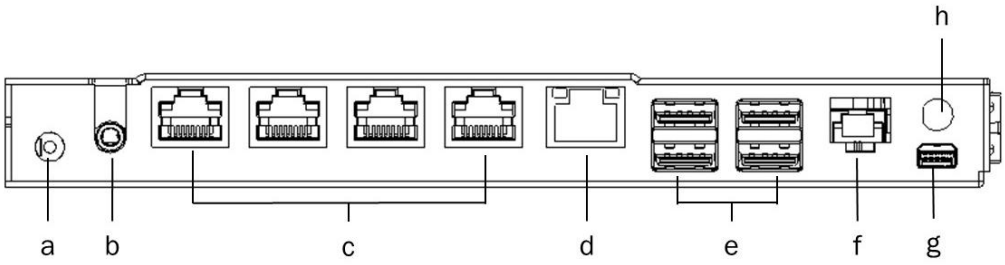

Right-side View

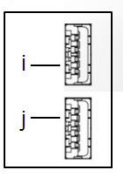

Bottom-up View	
Number	**Description**
a	DC-IN jack
b	Combo Audio jack (3.5mm 4 conductor)
c	COM1~4 (from right to left) (RJ50 Connector)
d	LAN (RJ45 Connector)
e	4 x USB 2.0 (Type A)
f	Cash Drawer (RJ12 Connector)
g	mini DP (Display Port)
h	reserved for Wi-Fi /Bluetooth

Right-side View	
Number	**Description**
i	1 x USB 3.0 (Type A)
j	1 x USB 2.0 (Type A)

3. System Assembly & Disassembly

3.1 Open the System Cover

Open the System Cover by pressing the System Cover Release Button.

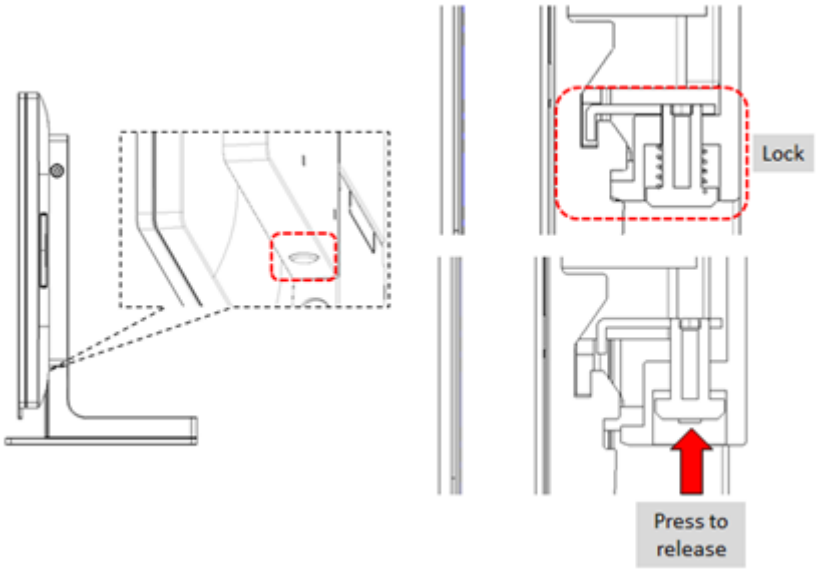

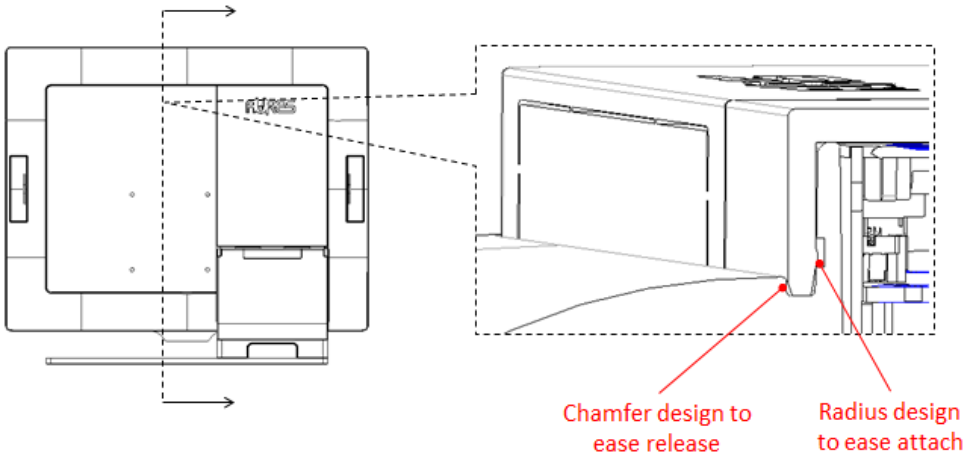

3.2 Replace the Storage Disk Drive

YUNO offers two 2.5" drive bays of height 7 mm each to allow you to equip it with a configuration of one primary HDD or SSD on the upper bay and one secondary SSD on the lower bay.
*Please note that if you are replacing your only HDD or SSD, you will need to reinstall your operating system after replacing it.

Make sure the unit is powered off before starting.

Please follow the below steps to finish the replacement :

1. Remove the System Cover
   To open the System Cover, please refer to the procedures described in Chapter 3-1 and remove it.

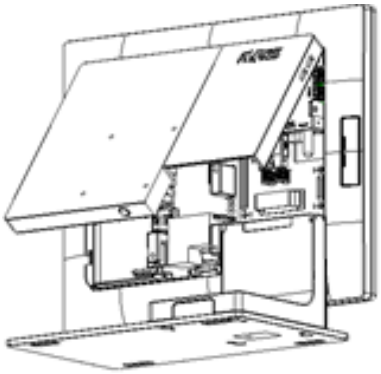

2. Remove the old drive (if applicable).
   If you are removing a HDD or SSD, make sure all of the cables are disconnected from both the motherboard and the power supply. Rotate the Releasing Handler to unlock the storage disk drive and slide it out of the housing.

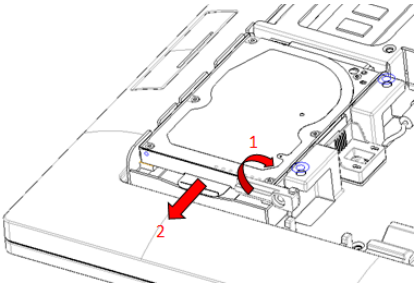

3. Insert your new drive.
   Remove it from the antistatic packaging and slide it into your target drive bay of the storage housing.

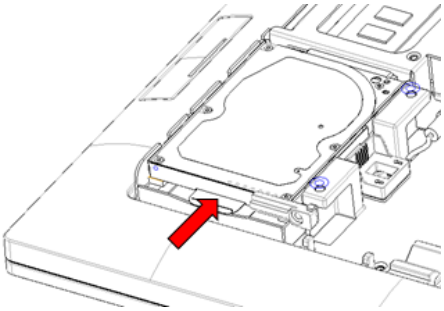

4. Secure the storage disk drive.

   Once the storage disk drive has been completely inserted, rotate the Releasing Handler to lock it properly.

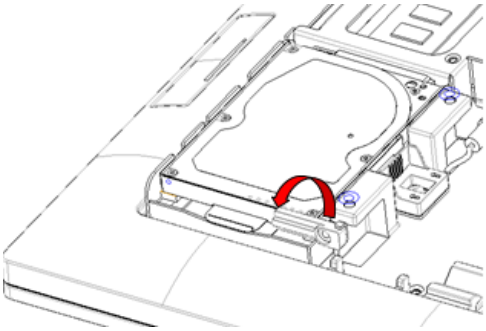

5. Connect the storage disk drive to the motherboard.

   *If you are connecting your primary storage disk drive, the SATA cable should be plugged into the first SATA channel, which is labeled as SATA0. Refer to Chapter 6 about the motherboard configuration for detailed information.

   Secondary drive should be connected to the next available SATA1 channel.

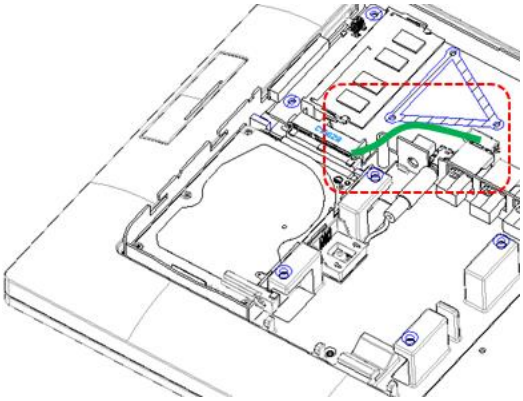

6. Connect the power supply to the storage disk drive.

   HDD1 labeled on the motherboard provides power supply to the primary storage disk drive, while HDD2 is for the secondary storage disk drive.

   Make sure that all of your connections are secure.

7. Get ready to power on the system.

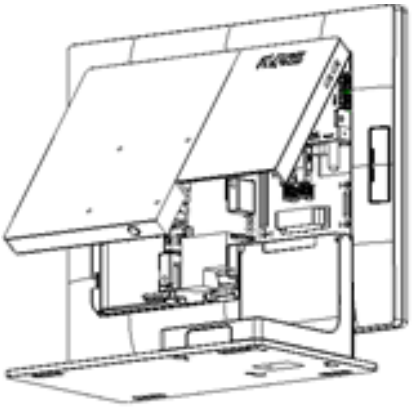

   Close up the System Cover.

   Reconnect the cable plug onto the wall socket and turn your YUNO on.

8. Finish the replacement.

   If you are replacing your primary drive, you'll have to reinstall your operating system.

   If you are adding a new drive, you'll need to format the drive before you can use it.

3.3 Replace the Memory

Make sure the system is powered off before starting.

Please follow the below steps to finish the replacement :

1. Remove the System Cover
   To open the System Cover, please refer to the procedures described in Chapter 3-1 and remove it.

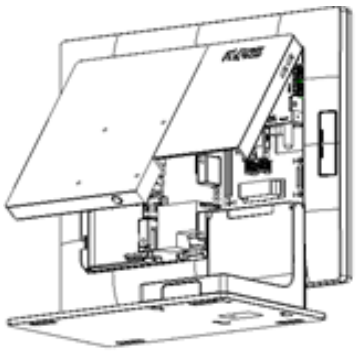

2. Locate the memory slot at the left rear side of the system.

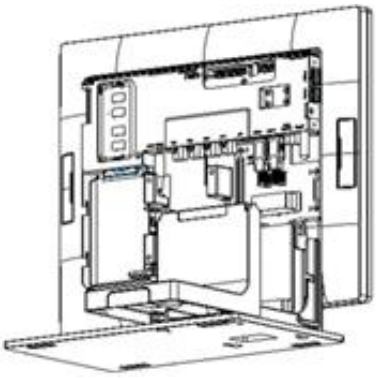

3. Flip the ejector clips outwards to remove the memory module from the memory slot.

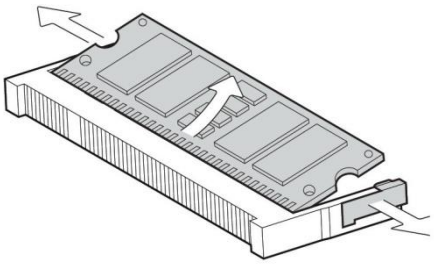

4. Slide the memory module into the memory slot and press down until the ejector clips snaps in place.

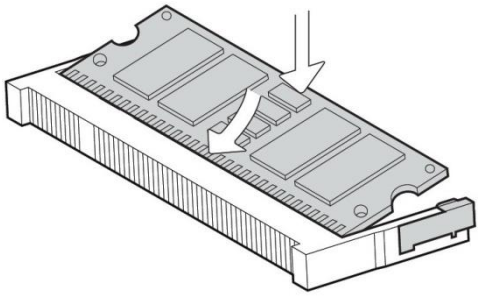

5. Close up the System Cover.

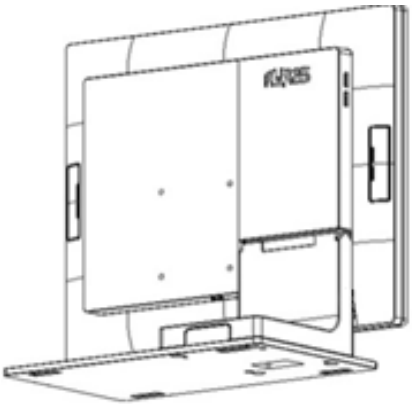

3.4 Install the Power Adapter

The system is equipped with a 65W power adapter. Please follow below procedures to get it plugged into the system.

1. To open the System Cover, please refer to the procedures described in Chapter 3-1, and remove it.

2. Locate the power connector on the I/O panel (please refer to Chapter 2-5) and connect the plug of power adapter directly to the DC-IN jack.
   Route the DC cord connection securely.

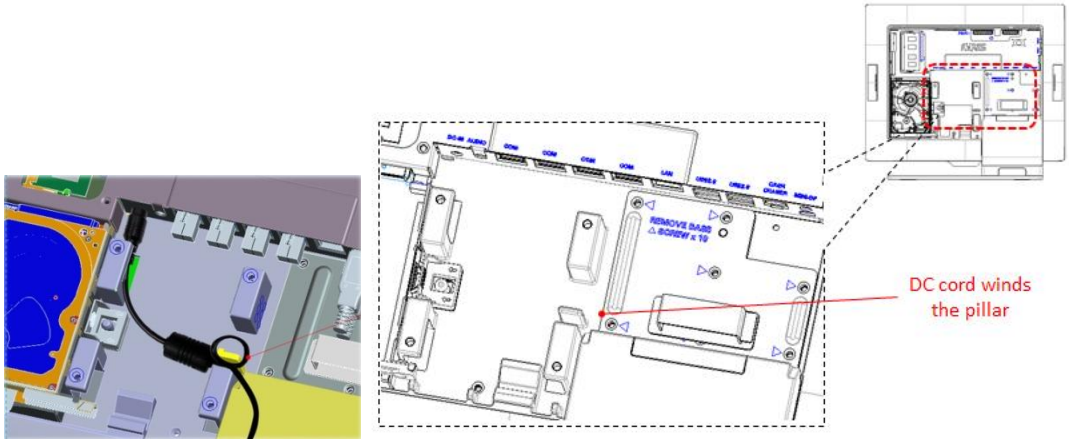

3. Remove the L-Stand Cover to locate the rest of DC cord properly.

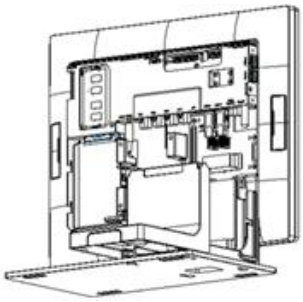

4. After finish, slide in the L-Stand Cover and close up the System Cover.

3.5 Install the Wall-mount

YUNO follows VESA Mounting Interface Standard to allow you to mount the elegant bezel-free panel PC to a stand or wall with four M4 screws easily.

The horizontal and vertical distance between the tapped holes on YUNO is 75 mm.

Make sure the system is powered off before starting.

Please follow the below steps to get it ready for the mounting process :

1. Remove the System Cover.
   To open the System Cover, please refer to the procedures described in Chapter 3-1, and remove it.

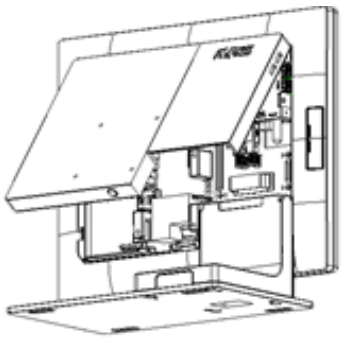

2. Remove the L-Stand Cover.

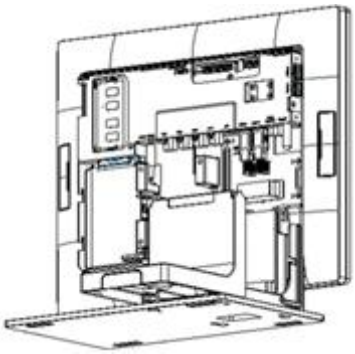

3. Detach the panel PC by unscrewing the**10** pcs of screws from the L-Stand Cover.

4. Remove the 4 pcs of rubber cap from the System Cover.

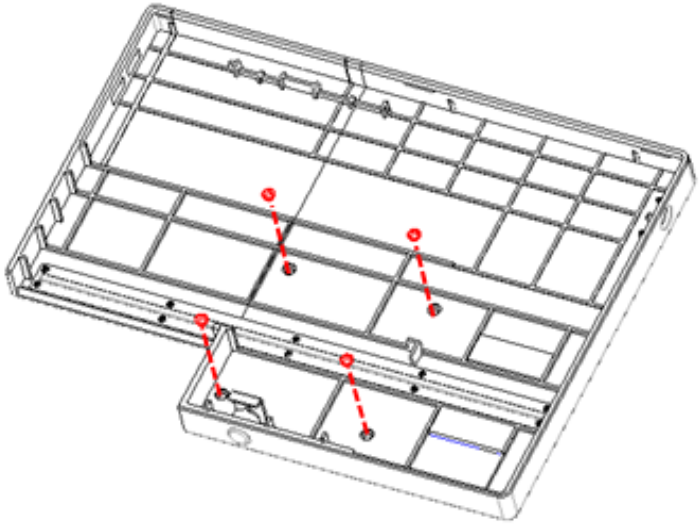

5. Get ready to the mounting process.

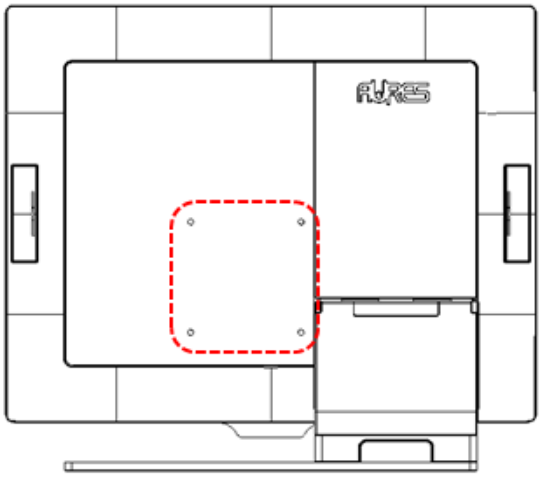

Close up the System Cover and then mount it to a stand or wall with four M4 screws easily.

4. Peripherals Installation

4.1 Install the Cash Drawer

You can install a cash drawer through the cash drawer port.
Please verify the pin assignment before installation.

Cash Drawer Pin Assignment

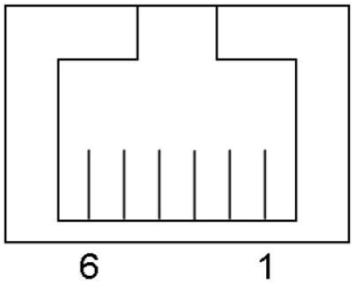

Pin	Signal
1	GND
2	DOUT bit0
3	DIN bit0
4	12V / 19V
5	DOUT bit1
6	GND

Cash Drawer Controller Register

The Cash Drawer Controller use one I/O addresses to control the Cash Drawer.

Register Location : 48Ch
Attribute : Read / Write
Size : 8-bit

BIT	BIT7	BIT6	BIT5	BIT4	BIT3	BIT2	BIT1	BIT0
Attribute	Reserved	Read	Reserved		Write		Reserved	

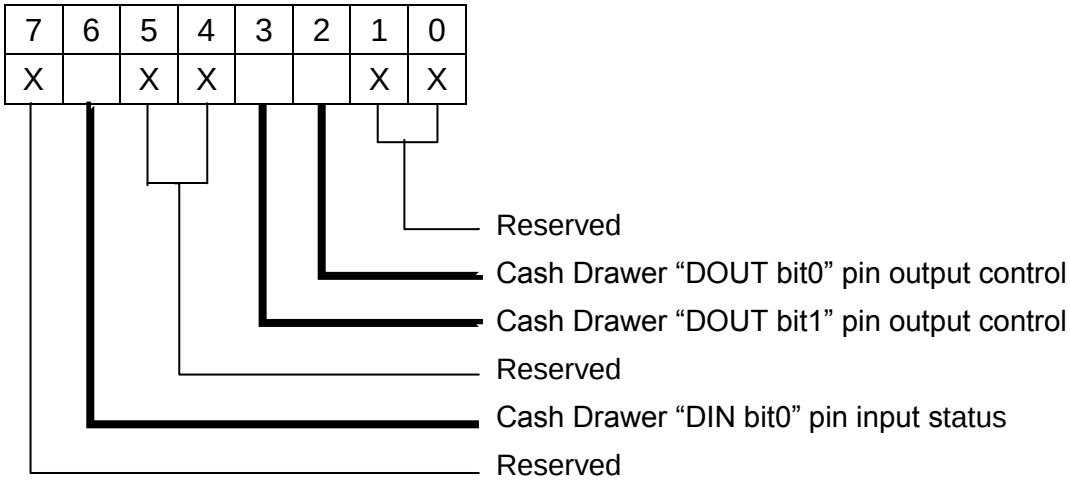

BIT7: Reserved

BIT6: Cash Drawer “DIN bit0” pin input status.

= 1: the Cash Drawer opened

= 0: the Cash Drawer closed or no Cash Drawer

BIT5: Reserved

BIT4: Reserved

BIT3: Cash Drawer “DOUT bit1” pin output control.

= 1: Opening the Cash Drawer

= 0: Allow close the Cash Drawer

BIT2: Cash Drawer “DOUT bit0” pin output control.

= 1: Opening the Cash Drawer

= 0: Allow close the Cash Drawer

BIT1: Reserved

BIT0: Reserved

Note: Please follow the Cash Drawer control signal design to control the Cash Drawer.

Cash Drawer Control Command Example

Use Debug.EXE program under DOS or Windows98

Command	Cash Drawer
O 48C 04	Opening
O 48C 00	Allow to close
➢ Set the I/O address 48Ch bit2 =1 for opening Cash Drawer by “DOUTbit0” pin control. ➢ Set the I/O address 48Ch bit2 = 0 for allow close Cash Drawer.	

Command	Cash Drawer
I 48C	Check status
➢ The I/O address 48Ch bit6 =1 mean the Cash Drawer is opened or not exist. ➢ The I/O address 48Ch bit6 =0 mean the Cash Drawer is closed.	

4.2 Install the Attachment-type Customer Display (YUNO-VFD)

The Attachment-type Customer Display(YUNO-VFD) can be installed from the rear top side of the system. Make sure the unit is powered off before starting.

Please follow the below steps to finish the installation :

1. Unscrew the two pcs of screws from the rear top service door and remove it.

2. Connect the Customer Display cable with the connector of the system. Locate this connection properly.

3. Insert the Customer Display in place and fasten the two pcs of screws to make it secure.

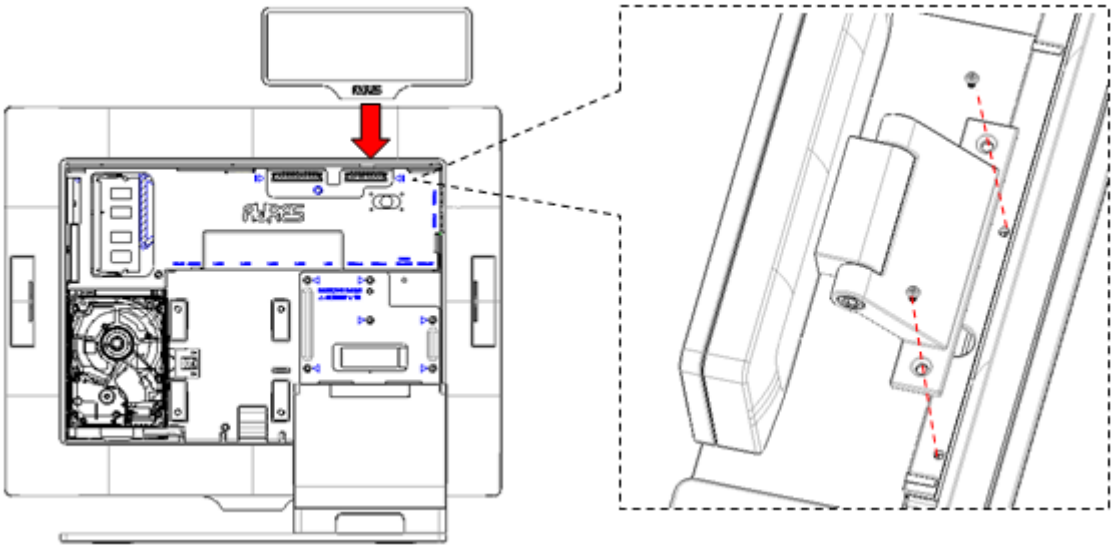

5. Specification

Model Name	YUNO	
Model Number	YUNO-151	YUNO-156
CPU support	Intel® Bay Trial-M SoC Processor J1900 (2M Cache, up to 2.42 GHz))	
System memory	1 x SO-DIMM DDR3L 1067/1333MHz, Max 8GB	
LAN controller	RTL8111G PCI-E Gigabit LAN	
Audio controller	Realtek ALC662 HD Audio CODEC with 2-Channel	
Audio	2W Speaker x 2	
BIOS	Phoenix uEFI BIOS	
LCD Panel		
LCD size	15.0" (Innolux G150XGE-L05)	15.6" (Innolux N156BGE-L41)
Brightness	250 cd/m²	200 cd/m²
Maximal resolution	1024 x 768	1366 x 768
Aspect Ratio	4:3	16:9
Backlight Type	LED	LED
Touch Sensor		
P-CAP Touch	QM (Shanghai) Technology, Model: PIF15003	QM (Shanghai) Technology, Model: PIF15601
Touch Screen	10	10
Controller IC	3M Dori1	SiS 9275
Interface	USB	USB
Storage		
1st HDD / SSD	1 x 2.5" 7mm SATA HDD or SATA MLC SSD	
2nd SSD	1 x 2.5" 7mm SATA MLC SSD	
Side I/O		
Power button	1 x with power indicator (blue color when power ON)	
USB	1 x USB 2.0 and 1 x USB 3.0	

Rear Bottom I/O		
DC-IN jack	1 x radio jack connector for 19V DC input	
Audio jack	1 x 4-conductor 3.5mm audio jack for MIC-in and Line-out	
Serial / COM	4 x RJ50 connector with RJ50 to DB9 cable for RS-232 port	
	- COM1/COM2: RS232, wake on ring (S1, S3, S4, S5) support	
	- COM3/COM4: RS232, powered COM with BIOS select none (Default setting)/ +5V (Default) / +12V for DB9 pin9 by BIOS setting.	
LAN	1 x RJ45 port for Gigabit Ethernet, support Wake on LAN	
USB	4 x USB 2.0	
Cash Drawer	1 x RJ12, support 12V / 24V DC Cash Drawer	
Display Port	1 x mini Display Port (supporting active converter cable to VGA, DVI, HDMI)	
Power		
Power Adapter	External 19V / 3.42A 65Watt Adapter	
Peripherals		
Customer Display	Attachment-type Customer Display (YUNO-VFD option) (Serial COM6)	
UPS Module	Intelligent UPS Module (YUNO-UPS option)	
Communication		
Wireless LAN	2.4/5GHz, 802.11ac, a/b/g, n Wi-Fi Bluetooth Module (YUNO-WBM option)	
Certifications		
EMI	FCC Class B / CE / LVD	
Safety	UL	
Environment		
Operating temperature	0℃ ~ 35℃ (32℉ ~ 95℉)	
Storage temperature	-20℃ ~ 60℃ (-4℉ ~ 140℉)	
Humidity	5% ~ 80%, non-condensing	
Dimension (W x D x H)	LCD 90 degree : 360.1 x 171.5 x 316.1 mm	LCD 90 degree : 402.2 x 171.5 x 295.3 mm
Weight (N.W./G.W.)	10kg / 11kg	11kg / 12kg
OS support	Windows® 7 Professional for Embedded Systems, Windows® Embedded POSReady 7, Windows® Embedded 8 Industry Retail	

* This specification is subject to change without prior notice.

6. Configuration

6.1 X72 Motherboard

6.1.1 Motherboard Layout

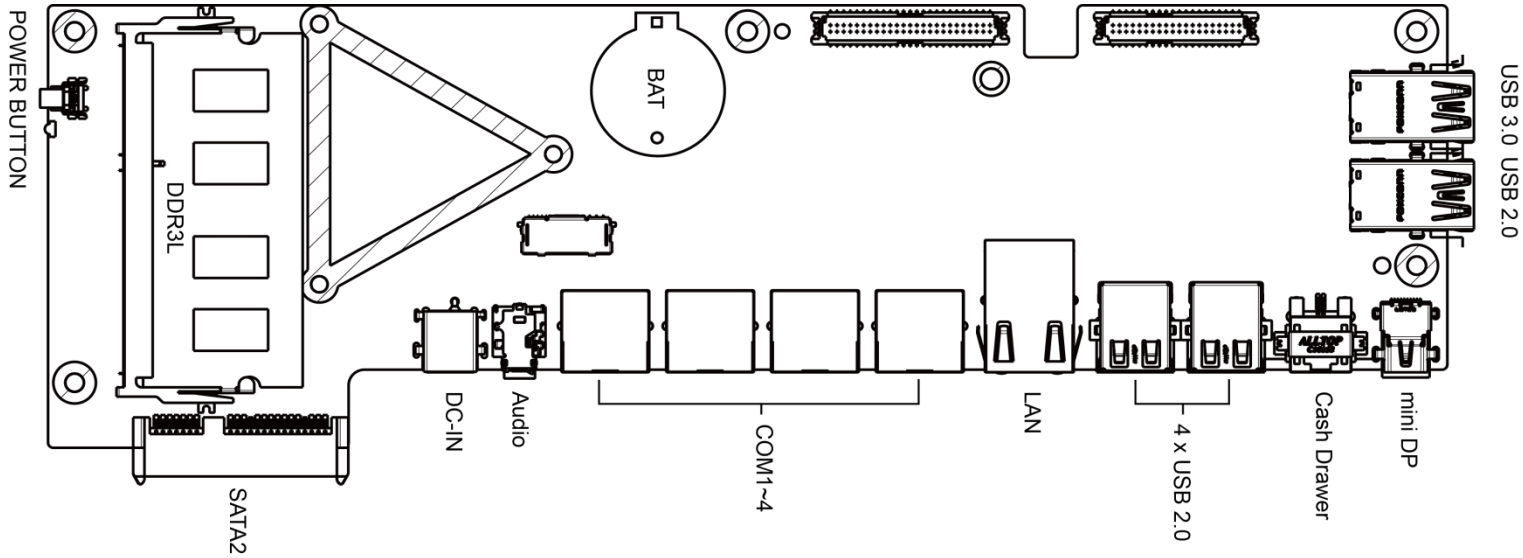

6.1.2 Connectors & Functions

Connectors	Functions
Internal	
LVDS1	50-pin connector
LVDS2	40-pin connector
HDD1	SATA power connector
HDD2	SATA power connector
INT_SP	Speaker connector
DIMM1	DDR3 SO-DIMM
CRT1	VGA connector (internal)
JP5	LCD Enable Level Select
JP6	LCD Power Select
JP7	RJ12 Power Select
External	
SW4	Power button
DC-IN	DC-IN jack
CN11	3.5mm 4 conductor Audio jack (Combo MIC-in and Line-out)
COM1,COM2,COM3,COM4	RJ50 Serial Ports
LAN_CON1	LAN port
USB_CON1	USB2.0 port0/1
USB_CON2	USB2.0 port2/3
RJ12	Cash Drawer
MINI_DP1	mini DP (Display Port)
USB30_1	USB3.0 port0/1
USB20_3	USB2.0 port4/5

6.1.3 Jumper Settings

LCD Enable Level Select

Function	JP5 (1-2)(2-3)
+5V	[1 2] 3
+3.3V (Default)	1 [2 3]

LCD Power Select

Function	JP6 (1-2)(2-3)
+5V	[1 2] 3
+3.3V (Default)	1 [2 3]

RJ12 Cash drawer Power Select

Function	JP7 (1-2)(2-3)
+19V (Default)	[1 2] 3
+12V	1 [2 3]

[▪▪] SHORT ▪▪ OPEN

Appendix A: Driver Installation

To download the most recent drivers and utilities, and obtain advice regarding the installation of your equipment, please visit the AURES Technical Support Website:

www.aures-support.fr(French)
www.aures-support.fr/UK(English)
www.aures-support.fr/GE(German)

Appendix B: Customer Display Command Settings

1. FEATURES

(1) Data can be displayed on 20 columns x 2 lines.
(2) Blue-green color and large characters are easy to eye.
(3) The commands modes, fonts, baud rate and other parameters are selected by software.
(4) CD5220 / UTC / EMAX / ADM / EscPOS / DSP-800 emulation command sets.
(5) User-defined characters can be downloaded
(for EscPOS /CD5220/DSP-800 command).
(6) Provides an interface based on RS-232C or USB
(baud rate: 4800, 9600, 19200, 38400, 115200 bps).
(7) Powered by 5V.

2. GENERAL SPECIFICATIONS

No	Item	Description
1	Display method	Vacuum fluorescent display
2	Number of character	40 characters (20 columns x 2 lines)
3	Character font	5 x 7 dot matrix
4	Display color	Blue green
5	Brightness	~ 500 cd/m²
6	Character type	96 alphanumeric 13 kinds of international character set 1 kind of user define character
7	Character size	9.03 mm x 5.25 mm
8	Power supply	5 V
9	Power consumption	2.3W (Max.)
10	MTBF	25,000 hours
11	Module dimensions	146 (W) x 49.2 (H) x 15.2 (D) mm
12	Weight	85g
13	Operating temperature	0 ~ 45℃
14	Operating Humidity	30% ~ 85%
15	Storage Temperature	-10 ~ 50℃
16	Storage Humidity	10% ~ 90%

3. INTERFACE

3.1 RS-232C Specifications

Data transmission	Serial
Synchronization	Asynchronous
Handshaking	DTR / DSR
Signal level	MARK = -3 to –15 V (logic “1”) SPACE = +3 to +15 V (logic “0”)
Baud rates	4800,9600,19200,38400 or 115200 bps
Parity and bit length	None parity, 8 data bits or Even parity, 7 data bits
Stop bits	1 or more

4. CONNECTOR AND JUMPER

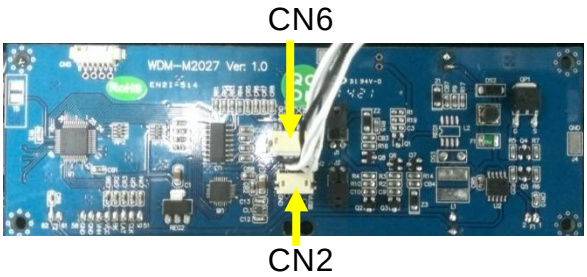

4.1 RS232C connecter (CN6)

Connector type: JST/ZH/1.5mm/6P

Pin assignment

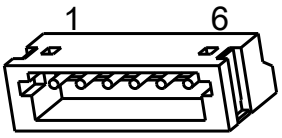

No	Signal	Direction	Function Description
1	TXD	From display to PC/Host	
2	RXD	From PC/Host to display	
3	RTS	From display to PC/Host	
4	CTS	From PC/Host to display	
5	GND	-	Signal ground
6	Vin	-	Power 5 Vdc

4.2 USB connecter (CN2)

Connector type: JST/ZH/1.5mm/4P

Pin assignment

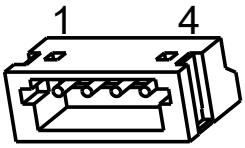

No	Signal	Direction	Function Description
1	GND	-	Signal ground
2	USBD+	-	USB data signal +
3	USBD-	-	USB data signal -
4	5Vdc	5V From PC/Host	Power 5 Vdc

4.3 ON/OFF Switch Connector

Type: JST/XH/2.5mm/2P

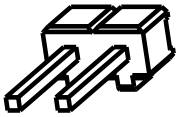

Location	SHORT	OPEN
J1	RS232 enable	RS232 disable
J2	USB enable	USB disable

5. COMMAND

5.1 CD5220 Standard Mode Command List

Command	Code (hex)	Function Description
ESC DC1	1B 11	Overwrite mode
ESC DC2	1B 12	Vertical scroll mode
ESC DC3	1B 13	Horizontal scroll mode
ESC QA ....CR	1B 51 41 *data* x m 0D	Set the string display mode,write string to upper line m ≦ 20
ESC QB ....CR	1B 51 42 *data* x m 0D	Set the string display mode, write string to lower line m ≦ 20
ESC QD ....CR	1B 51 44 *data* x m 0D	Upper line message scroll continuously m ≦ 40
ESC [D	1B 5B 44	Move cursor left
BS	08	Move cursor left
ESC [C	1B 5B 43	Move cursor right
HT	09	Move cursor right
ESC [A	1B 5B 41	Move cursor up
ESC [B	1B 5B 42	Move cursor down
LF	0A	Move cursor down
ESC [H	1B 5B 48	Move cursor to home position
HOM	0B	Move cursor to home position
ESC [L	1B 5B 4C	Move cursor to left-most position
CR	0D	Move cursor to left-most position
ESC [R	1B 5B 52	Move cursor to right-most position
ESC [K	1B 5B 4B	Move cursor to bottom position
ESC l x y	1B 6C x y	Move cursor to specified position 1 ≦x≦ 20 ,row position 1 ≦y≦ 2 ,column position
ESC @	1B 40	Initialize display
CLR	0C	Clear display screen , and clear string mode
CAN	18	Clear cursor line, and clear string mode
ESC * n	1B 2A n	Brightness adjustment 1≦n≦4

ESC & s n m [a (P1..pa)]x (m-n+1)	1B 26 1 n m [a(p1..pa)] x (m-n+1)	Define download characters. 32 ≦ n ≦ m 255 1 ≦a ≦ 5 p1..p5 =row1..row5
ESC ? n	1B 3F n	Deletes download characters. 32 ≦ n ≦ m 255
ESC % n	1B 25 n	Select/cancel download character set. n = 0 , Cancel n = 1 , Select
ESC _ n	1B 5F n	Set cursor on/off n = 1 , cursor on n = 2 , cursor off
ESC f n	1B 66 n	Select international fonts set, refer *2
ESC c n	1B 63 n	Select code, refer *3
ESC = n	1B 3D n	Select peripheral device, display or printer n bit 0 = 1 select printer n bit 1 = 1 select display

*REMARK :

*1 The parameter of international fonts set control by command **"ESC f n"**

Parameter "n"	International font set
"A"	U.S.A.
"G"	Germany
"I"	Italy
"J"	Japan
"U"	U.K.
"F"	France
"S"	Spain
"N"	Norway
"W"	Sweden
"D"	Denmark I
"E"	Denmark II
"L"	Slavonic
"R"	Russia

*2 The parameter of the code table control by command **"ESC c n"**

Parameter "n"	International font set
"A"	Compliance with ASCII code
"J"	Compliance with JIS code
"L"	Compliance with SLAVONIC code
"R"	Compliance with RUSSIA code

5.2 UTC standard mode command list

Command	Code (hex)	Function Description
EOT n	04 n	Display Dimming n = 20h, 40h, 60h, FFh
BS	08	Back space
HT	09	Horizontal tab
LF	0A	Line feed
CR	0D	Carriage return
DLE	0F	Display position
DC1	11	Over write display mode
DC2	12	Vertical scroll mode
DC3	13	Cursor on
DC4	14	Cursor off
CAN	18	Clear to end of line
EM	19	Clear to end of display
FS	1C	Flashing text start
GS	1D	Flashing text end
US	1F	Reset display
RS	1E	Home and clear display
ESC d	1B 64	Change to UTC enhanced mode

5.3 UTC enhanced mode command list

Command	Code (hex)	Function Description
SI	0F	Flashing text start
SO	0E	Flashing text stop
ESC u A ..CR	1B 75 41 *data* x m 0D	Upper line display 0 ≦ m ≦ 20
ESC u B ..CR	1B 75 42 *data* x m 0D	Bottom line display 0 ≦ m ≦ 20
ESC u D ..CR	1B 75 44 *data* x m 0D	Upper line message scroll continuously 0 ≦ m ≦40
ESC u E ..CR	1B 75 45 “hh:mm” 0D	Display time ’00’≦ hh ≦ ‘23’ ’00’≦ mm ≦ ‘59’
ESC u F ..CR	1B 75 46 *data* x m 0D	Upper line message scroll once pass
ESC u H ..CR	1B 75 48 n m 0D	Change attention code 32 ≦ n ≦ 255 32 ≦ m ≦ 255
ESC u I ..CR	1B 75 49 *data* x m 0D	Two line display 0 ≦ m ≦ 40
ESC RS CR	1B 0F 0D	Change to UTC standard mode

5.4 AEDEX mode command list

Command	Code (hex)	Function Description
! # 1 ....CR	21 23 31 *data* x m 0D	Upper line display 0 ≦ m ≦ 40
! # 2 ....CR	21 23 32 *data* x m 0D	Bottom line display 0 ≦ m ≦ 40
! # 4 ....CR	21 23 34 *data* x m 0D	Upper line message scroll continuously 0 ≦ m ≦ 40
! # 5 ....CR	21 23 35 “hh:mm” 0D	Display time ‘00’≦ hh ≦ ‘23’ ’00’≦ mm ≦ ‘59’
! # 6 ....CR	21 23 36 *data* x m 0D	Upper line message scroll one pass 0 ≦ m ≦ 40
! # 8 ....CR	21 23 38 n m 0D	Change attention code 32 ≦n ≦255 32 ≦ m ≦ 255
! # 9 ....CR	21 23 39 *data* x m 0D	Two line display 0 ≦ m ≦ 40

5.5 PD3000 mode command list

Command	Code (hex)	Function Description
DC2	12	Vertical Scroll Mode
DC1	11	Normal Display Mode
EOT	04	Brightness Control
BS	08	Back Space
HT	09	Horizontal Tab
LF	0A	Line Feed
CR	0D	Carriage Return
DLE	10	Digit Select
DC3	13	Cursor On
DC4	14	Cursor Off
US	1F	Reset
ETX	03	Down Load Font
ENQ d1~d45 CR	05 d1~d45 0D	Message Scroll
SOH	01	Data to Peripheral
! # STX	21 23 02	Data to Display

5.6 ADM788 mode command list

Command	Code (hex)	Function Description
CLR	0C	Clear display
CR	0D	Carriage return
SLE1	0E	Clear up line and move cursor to upper line left most end
SLE2	0F	Clear low line and move cursor to lower line left most end
DC0 n	10 n	Set period to upper line last n position 31H ≦ n ≦ 44H
DC1 n	11 n	Set line blanking , n = 31H up line n = 32H low line
DC2 n	12 n	Clear line blanking , n = 31H up line n = 32H low line
SF1	1E	Clear field 1 and move cursor to field 1 fast position
SF2	1F	Clear field 2 and move cursor to field 2 fast position

5.7 DSP-800 mode command list

Command	Code (hex)	Function Description
EOT SOH I n ETB	04 01 49 n 17	Select international character set.
EOT SOH P n ETB	04 01 50 n 17	Move cursor to specified position. 31H ≦ n ≦ 58H
EOT SOH C n m ETB	04 01 43 n m 17	Clear display range from n position to m position and move cursor to n position. 31H ≦ n ≦ m ≦ 58H
EOT SOH S n ETB	04 01 53 n 17	Save the current displaying data to n layer for demo display. 31H ≦n ≦ 33H Refer*1
EOT SOH D n m ETB	04 01 44 n m 17	Display the saved data 31H ≦ n ≦ 37H 31H ≦ m ≦ 37H Refer*2
EOT SOH A n ETB	04 01 41 n 17	Brightness adjustment. 31H ≦ n ≦ 34H
EOT SOH F n ETB	04 01 46 n 17	Blink display screen. 0 ≦ n ≦ 255
EOT SOH & n [px5] ETB	04 01 26 n p1...p5 17	Define download characters 20H < n ≦ FFH
EOT SOH ? n ETB	04 01 3F n 17	Delete download characters. 20H < n ≦ FFH
EOT SOH = n ETB	04 01 3D n 17	Select peripheral device. n = 31H,select printer n = 32H,select display
EOT SOH % ETB	04 01 25 17	Initialize display
EOT SOH @ ETB	04 01 40 17	Execute self-test

*REMARK :

*1 Using commands “EOT SOH S n ETB”, the value (Hex) of parameter.

n	Layer
31h	Save data in layer 1
32h	Save data in layer 2
33h	Save data in layer 3

*2 Using commands “EOT SOH D n m ETB”, the value (Hex) of parameter.
WinPOS extended “select mode” from 33h to 37h

n	Select layer	m	Select mode
31h	Demo layer 1	31h	Demo mode 1
32h	Demo layer 2	32h	Demo mode 2
33h	Demo layer 3	33h	Demo mode 3
34h	Demo layer 1 + 2	34h	Demo mode 1 + 2
35h	Demo layer 1 + 3	35h	Demo mode 1 + 3
36h	Demo layer 2 + 3	36h	Demo mode 2 + 3
37h	Demo layer 1 + 2 + 3	37h	Demo mode 1 + 2 + 3

5.8 EPSON Esc / pos command list

Command	Code (hex)	Function Description
HT	09	Move cursor right.
BS	08	Move cursor left.
US LF	1F0A	Move cursor up.
LF	0A	Move cursor down.
US CR	1F 0D	Move cursor to right-most position.
CR	0D	Move cursor to left-most position.
HOM	0B	Move cursor to home position.
US B	1F 42	Move cursor to bottom position.
US $ x y	1F 24 x y	Move cursor to specified position. 1 ≦ x ≦ 20 1 ≦ y ≦ 2
CLR	0C	Clear display screen.
CAN	18	Clear cursor line
US X n	1F 58 n	Brightness adjustment. 1 ≦ n ≦ 4
US E n	1F 45 n	Blink display screen. 0 ≦ n ≦ 255
ESC @	1B 40	Initialize display.
ESC t n	1B 74 n	Select character code table. 0 ≦ n ≦ 7, 12, 16, 19, 40 Refer*2
ESC R n	1B 52 n	Select international character set. 0 ≦ n ≦ 10 Refer*1
US r n	1F 72 n	Select/cancel reverse character. 0 ≦ n ≦ 1
US MD1	1F 01	Specify overwrite mode.
US MD2	1F 02	Specify vertical scroll mode.
US MD3	1F 03	Specify horizontal scroll mode.
ESC & s n m [a(p1..pa)]x m-n	1B 26 1 n m [a(p1..pa)]x m-n	Define download characters. 32 ≦ n ≦ 255 1≦ a ≦ 5 p1..p5 =row1..row5
ESC ?	1B 3F n	Delete downloads characters. 32 ≦ n ≦ 255

ESC %	1B 25 n	Select/cancel download character set. n = 0 , Cancel n = 1 , Select
ESC = n	1B 3D n	Select peripheral device. n bit 0 = 1 select printer n bit 1 = 1 select display
US :	1F3A	Set starting/ending position of macro definition.
US ^ n m	1F 5E n m	Execute and quit macro. 0 ≦n≦255 , 0 ≦m≦255
US @	1F 40	Execute self-test.
US T h m	1F 54 h m	Display time 0 ≦h≦23 , 0≦m≦59
US U	1F 55	Display time continuously
US C n	1F 43 n	Select / cancel cursor display n = 1 , cursor on n = 0 , cursor off

*REMARK :

*1 Select international character set

n	International font	n	International font
0	U.S.A.	8	Japan
1	France	9	Norway
2	Germany	10	Denmark II
3	U.K.	11	Slavonic
4	Denmark I	12	Russia
5	Sweden	13	Portuguese
6	Italy	14	Greek
7	Spain	15	Reserved

*2 Select character code table

n	Code table	n	Code table
0	Page 0, (PC437,USA standard Euro.)	6	Page 6,(Slavonic)
1	Page 1,(Katakana for Japan)	7	Page 7,(Russia)
2	Page 2,(PC850,Multilingual)	19	Page 19,(PC858, Euro)
3	Page 3,(PC860, Portuguese)	16	Page 16,(WPC1252)
4	Page 4,(PC863,Canadian-French)	12	Page 12,(Greek)
5	Page 5,(PC865,Nordic)		

6. CHARACTER SET

6.1 International Font

6.1.1 USA, standard character set (20h – 7Eh)

	00	01	02	03	04	05	06	07	08	09	0A	0B	0C	0D	0E	0F
20H	....	..0.. ..0.. ..0.. ..0.. ....0..	.0.0. .0.0. .0.0.	.0.0. .0.0. 00000 .0.0. 00000 .0.0. .0.0.	..0.. .0000 0.0.. .000. ..0.. 0000. ..0..	00... 00..0 ...0. ..0.. .0... 0..00 ...00	.00.. 0..0. 0.0.. 0..0.. 0.0.0 0..0. .00.0	.00.. ..0.. .0...	...0. ..0.. .0... .0... .0... ..0.. ...0.	.0... ..0.. ...0. ...0. ...0. ..0.. .0...	....0.. 0.0.0 .000. 0.0.0 ..0..	....0.. ..0.. 00000 ..0.. ..0..	....0.. ..... .00.. ..0..	.... 00000 .00.. ..... .00..	....0 ...0. .... 0....	....0 ....0.. ....
30H	.000. 0...0 0..00 0.0.0 00..0 0...0 .000.	..0.. .00.. ..0.. ..0.. ..0.. ..0.. .000.	.000. 0...0 ....0 ...0. ..0.. ..0.. 00000	00000 ...0. ..0.. ...0. ....0 ....0 .000.	...0. ..00. .0.0. 0..0. 00000 ...0. ...0.	00000 0.... 0000. ....0 ....0 0...0 .000.	..00. .0... ...0. 0000. 0...0 0...0 .000.	00000 ....0 .0... 0000. .0... .0... .0...	.000. 0...0 0...0 .000. 0...0 0...0 .000.	.000. 0...0 0...0 .0000 ....0 ...0. .00..	..... .00.. .00.. ..... .00.. .00..	..... .00.. .00.. ..... .00.. .00.. .0...	...0. ..0.. .0... 0.... 00000 ..0.. ...0.	.... 00000	.0... ..0.. ...0. ....0 ...0. ..0.. .0...	.000. 0...0 ....0 ...0. 0...0 ..0.. ..0..
40H	.000. 0...0 0.000 00.00 0.000 0.... .0000	..0.. .0.0. 0...0 0...0 00000 0...0 0...0	0000. 0...0 0...0 0000. 0...0 0...0 0000.	.000. 0...0 0.... 0.... 0...0 0...0 .000.	000.. 0..0. 0...0 0...0 0...0 0..0. 000..	00000 0.... 0.... 0000. 0.... 0.... 00000	00000 0.... 0.... 0000. 0.... 0.... 0....	.000. 0...0 0.... 0.000 0...0 0...0 .0000	0...0 0...0 0...0 00000 0...0 0...0 0...0	.000. ..0.. ..0.. ..0.. ..0.. ..0.. .000.	.0000 ...0. ...0. ...0. ...0. 0..0. .00..	0...0 0..0. 0..0. 0..0. 0..0. 0..0. 0...0	0.... 0.... 0.... 0.... 0.... 0.... 00000	0...0 00.00 0.0.0 0.0.0 0...0 0...0 0...0	0...0 0...0 00..0 0.0.0 0..00 0...0 0...0	.000. 0...0 0...0 0...0 0...0 0...0 .000.
50H	0000. 0...0 0...0 0000. 0.... 0.... 0....	.000. 0...0 0...0 0...0 0.0.0 0..0. .00.0	0000. 0...0 0...0 0000. 0.0.. 0..0. 0...0	.000. 0...0 0.... .000. ....0 0...0 .000.	00000 ..0.. ..0.. ..0.. ..0.. ..0.. ..0..	0...0 0...0 0...0 0...0 0...0 0...0 .000.	0...0 0...0 0...0 0...0 0...0 0.0.0 ..0..	0...0 0...0 0...0 0.0.0 0.0.0 0.0.0 .0.0.	0...0 0...0 .0.0. 0...0 0.0.0 0...0 0...0	0...0 0...0 .0.0. ..0.. ..0.. ..0.. ..0..	00000 ....0 ...0. ..0.. .0... 0.... 00000	.000. .0... .0... .0... .0... .0... .000.	..... 0.... 0.... ..0.. ...0. ....0 ..00.	.000. ...0. ...0. ...0. ...0. ...0. .000.	..0.. .0.0. 0...0 0...0	 00000
60H	..0.. ...0.	.... .000. ....0 .0000 0...0 .0000	0.... 0.... 0000. 0...0 0...0 0...0 0000.	.... .0000 0.... 0.... 0.... .0000	....0 ....0 .0000 0...0 0...0 0...0 .0000	....000 0...0 00000 0.... ..000	...0. ..0.0 ..0.. .000. ..0.. ..0.. ..0..	.... .0000 0...0 .0000 ....0 0000.	0.... 0.... 0000 0...0 0...0 0...0 0...0	..0.. ..... .00.. ..0.. ..0.. ..0.. .000.	...0. ....0. ...0. ...0. 0..0. .00..	0.... 0.... 0.0.. 0.0.. 00... 0.0.. 0.0..	.00.. ..0.. ..0.. ..0.. ..0.. ..0.. .000.	.... 00.00 0.0.0 0.0.0 0.0.0 0...0	.... 0.00. 00..0 0...0 0...0 0...0	.... .000. 0...0 0...0 0...0 .000.
70H	.... 0000. 0...0 0000. 0.... 0....	.... .0000 0...0 .0000 ....0 0	.... 0.00. 00..0 0.... 0.... 0....	.... 0000 0.... .000. ....0 0000.	..0.. ..0.. 00000 ..0.. ..0.. ..0.0 ...0.	.... 0...0 0...0 0...0 0...0 .000.	.... 0...0 0...0 0...0 0.0.0 ..0..	.... 0...0 0...0 0.0.0 0.0.0 .0.0.	.... 0...0 .0.0. ..0.. 0...0 0...0	.... 0...0 0...0 .0000 .....0 0000.	.... .0... 0...0 0.... .0... 00000	..00. .0... 0.... ..... .0... .0... ..00.	..0.. ..0.. ..0.. ..0.. ..0.. ..0.. ..0..	.00.. ...0. ...0. ....0 ...0. ...0. .00..	.00.0 0.00. 0...0 .... .00..	..0.. .0.0. 0...0 0...0 00000 ....

6.1.2 Other character sets

Country\Hex	23	24	40	5B	5C	5D	5E	60	7B	7C	7D	7E
U.S.A	.0.0. .0.0. 00000 .0.0. 00000 .0.0. .0.0.	..0. .0000 0.0. .000. ..0.0 0000. ..0.	.000. 0...0 0.000 00.00 0.000 0.... .0000	.000. .0... .0... .0... .0... .0... .000.	..... 0.... .0... ..0. ...0. ....0	.000. ...0. ...0. ...0. ...0. ...0. .000.	..0. .0.0. 0...0	..0. ...0.	..00. .0... .0... 0.... .0... .0... ..00.	..0. ..0. ..0. ....0. ..0. ..0.	.00. ...0. ...0. ....0 ...0. ...0. .00.	.00.0 0.00. ....
France	.0.0. .0.0. 00000 .0.0. 00000 .0.0. .0.0.	..0. .0000 0.0. .000. ..0.0 0000. ..0.	.0... ..0. .000. ....0 .0000 0...0 .000.	.000. .0.0. .000.	.0000 0.... 0.... 0.... .0000 ..0. .0...	.000. 0.... .000. 0...0 .000. ....0 .000.	..0. .0.0. 0...0	.0.. ..0. ...0.	...0. ..0. .000. 0...0 00000 0.... .000.	.0... ..0. ..... 0...0 0...0 0..00 .00.0	.0... ..0. .000. 0...0 00000 0.... .0000	.0.0. ....
Germany	.0.0. .0.0. 00000 .0.0. 00000 .0.0. .0.0.	..0. .0000 0.... .000. ..0.0 0000. ..0.	.000. ..... .000. 0...0 ....0 .000.	0...0 ..... .000. 0...0 00000 0...0 0.000.	0...0 ..... .000. 0...0 0...0 0...0 .000.	0...0 ..... 0...0 0...0 0...0 0...0 .000.	..0. 0.0. 0...0	.0.. ..0. ...0.	.0.0. ..... .000. ....0 .0000 0...0 .0000	..... .0.0. ..... .000. 0...0 0...0 .000.	..... .0.0. ..... 0...0 0...0 0..00 .000.	..00. 0..0. 000.. 0..0. 000.. 0... .....
U.K	..00. .0..0 .0... 0000. .0... .0... 00000	..0. .0000 0.0. .000. ..0.0 0000. ..0.	.000. 0...0 0.000 00.00 0.000 0.... .0000	.000. 0.... 0.... 0.... 0.... 0.... .000.	..... 0.... 0.... ..0.. ...0. ....0	.000. ...0. ...0. ...0. ...0. ...0. .000.	..0.. .0.0. 0...0	..0.. ...0.	..00. .0... .0... 0.... .0... .0... ..00.	..0.. ..0.. ..0.. ....0.. ..0.. ..0..	.00.. ...0. ...0. ....0 ...0. ...0. .00..	.00.0 0.00. ....
Denmark I	.0.0. .0.0. 00000 .0.0. 00000 .0.0. .0.0.	..0. .0000 0.0. .000. ..0.0 0000. ..0.	.000. 0.0.. 0.000 00.00 0.000 0.... .0000	.0000 0.0.. 0.0.. 0.000 000.. 0.0.. 0.000	..0.. 0.0.. 0.0.0 0.0.0 0.0.0 .000. ..0..	..0.. .0.0. ..0.. .000. 00000 0...0 0...0	..0.. 0.0.0 0...0	.0.. ..0.. ...0.	.... 00.0. ..0.0 .0000 0.0.. 00.00	....0. .000. 0.0.0 0.0.0 .000. .0...	..0.. ..... .000. 0.0.0 .0000 0...0 .0000	.00.0 0.00. ....0.. ....
Sweden	.0.0. .0.0. 00000 .0.0. 00000 .0.0. .0.0.	0...0 .000. 0...0 0...0 0...0 .000. 0...0	...0. ..0.. 00000 .0.0. 0000. 00000 00000	.0.0. ....0.. 0...0 0...0 0...0 0...0	.0.0. ..... .000. 0...0 0...0 0...0 .000.	.000. .0.0. .000. 0...0 00000 0...0 0...0	.0.0. ..... 0...0 0...0 0...0 0...0 .000.	...0. ..0.. .000. 0...0 00000 0... .000.	.0.0. ..... .000. ....0 .0000 0...0 0000.	..... .0.0. 0...0 0.000. 0...0 0...0 0.000.	.000. .0.0. .000. ....0 .0000 0...0 .0000	..... .0.0. ..... 0...0 0...0 0...0 00.0
Italy	.0.0. .0.0. 00000 .0.0. 00000 .0.0. .0.0.	..0.. .0000 0.0.. .000. ..0.0 0000. ..0.	.000. 0...0 0.000 00.00 0.000 0.... .0000	.000. 0.0.0 .000.	...0. ..0.. .000. 0...0 00000 0....	...0. ..0.. .000. .... 0.... .0000	..0.. .0.0. 0...0	.0... ..0.. ..... 0...0 0...0 0..00 .00.0	.0... ..0.. .000. ....0 .0000 0...0 .0000	.0... ..0.. ..... 0...0 00000 0.... .000.	.0... ..0.. .000. 0...0 ..0.. ..0.. .0000	..0... ..0.. ....0.. ..0.. ..0.. .000.
Spain	0000. 0...0 0000. 0..0. 0.000 0..0. 0..00	..0.. .0000 0.0.. .000. ..0.0 0000. ..0.	.000. 0...0 0.000 00.00 0.000 0.... .0000	..0.. 0.00. ....0.. ..0.. ..0.. ..0..	.00.0 .... 00..0 0.0.0 0..00 0...0	..0.. ....0.. .0... 0.... 0...0 .000.	..0.. .0.0. 0...0	..0.. ...0.	.0.0.	.00.0 0.00. .... 00..0 0...0 0...0	.00.. ...0. ...0. ....0 ...0. ...0. .00..	.00.0 0.00. ....
Japan	.0.0. .0.0. 00000 .0.0. 00000 .0.0. .0.0.	..0.. .0000 0.0.. .000. ..0.0 0000. ..0.	.000. 0...0 0.000 00.00 0.000 0.... .0000	.000. .0... .0... 0.... 0.... .0... .000.	0...0 .0.0. 00000 ..0.. 00000 ..0.. ..0..	.000. ...0. ...0. ...0. ...0. ...0. .000.	..0.. .0.0. 0...0	.0... ..0.. ...0.	..00. .0... .0... 0.... .0... .0... ..00.	..0.. ..0.. ..0.. ....0.. ..0.. ..0..	.00.. ...0. ...0. ....0 ...0. ...0. .00..	....0 .000. 0.... ....
Norway	.0.0. .0.0. 00000 .0.0. 00000 .0.0. .0.0.	0...0 .000. 0...0 0...0 0...0 .000. 0...0	...0. ..0.. 00000 0.... 0.000 0.... 00000	.0000 0.0.. 0.0.. 0.000 000.. 0.0.. 0.000	....0 .000. 0..00 0.0.0 00..0 .000. 0....	.000. .0.0. .000. 0...0 00000 0...0 0...0	.0.0. ..... 0...0 0...0 0...0 0...0 .000.	...0. ..0.. .000. 0...0 00000 0.... .000.	.... 00.0. ..0.0 .0000 0.0.. 00.00	....0. .000. 0.0.0 0.0.0 .000. 0...0	.000. .0.0. .000. ....0 .0000 0...0 .0000	.0.0. .... 0...0 0...0 0...0 00.0
Denmark II	.0.0. .0.0. 00000 .0.0. 00000 .0.0. .0.0.	..0.. .0000 0.0.. .000. ..0.0 0000. ..0.	...0. ..0.. 00000 0.... 0.000 0.... 00000	.0000 0.0.. 0.0.. 0.000 000.. 0.0.. 0.000	....0 .000. 0..00 0.0.0 00..0 .000. 0....	.000. .0.0. .000. 0...0 00000 0...0 0...0	.0.0. ..... 0...0 0...0 0...0 0...0 .000.	...0. ..0.. .000. 0...0 00000 0.... .000.	.... 00.0. ..0.0 .0000 0.0.. 00.00	....0. .000. 0.0.0 0.0.0 .000. 0...0	.000. .0.0. .000. ....0 .0000 0...0 .0000	.0.0. .... 0...0 0...0 0...0 00.0
Slavonic	.0.0. .0.0. 00000 .0.0. 00000 .0.0. .0.0.	..0.. .0000 0.0.. .000. ..0.0 0000. ..0.	.000. 0...0 0.000 00.00 0.000 0.... .0000	.000. 0.... .0... 0.... 0.... 0.... .000.	..... 0.... .0... ..0.. ...0. ....0	.000. ...0. ...0. ...0. ...0. ...0. .000.	..0.. .0.0. 0...0	..0.. ...0.	..00. .0... .0... 0.... .0... .0... ..00.	..0.. ..0.. ..0.. ....0.. ..0.. ..0..	.00.. ...0. ...0. ....0 ...0. ...0. .00..	.00.0 0.00. ....
Russia	.0.0. .0.0. 00000 .0.0. 00000 .0.0. .0.0.	..0.. .0000 0.0.. .000. ..0.0 0000. ..0.	.000. 0...0 0.000 00.00 0.000 0.... .0000	.000. 0.... .0... 0.... 0.... 0.... .000.	..... 0.... .0... ..0.. ...0. ....0	.000. ...0. ...0. ...0. ...0. ...0. .000.	..0.. .0.0. 0...0	..0.. ...0.	..00. .0... .0... 0.... .0... .0... ..00.	..0.. ..0.. ..0.. ....0.. ..0.. ..0..	.00.. ...0. ...0. ....0 ...0. ...0. .00..	.00.0 0.00. ....

6.2 Code Page

6.2.1 Page 0 (PC437: USA, Standard Europe) (80H – FFH)

	00	01	02	03	04	05	06	07	08	09	0A	0B	0C	0D	0E	0F
80H	.0000 0.... 0.... 0.... .0000 ..0.. .0...	..... .0.0. ..... 0...0 0...0 0..00 .00.0	...0. ..0.. .000. 0...0 00000 0.... .000.	..0.. .0.0. .000. ....0 .0000 0...0 .0000	.0.0. ..... .000. ....0 .0000 0...0 .0000	.0... ..0.. .000. ....0 .0000 0...0 .0000	..0.. .0.0. ..0.. .0000 .0000 0...0 .0000	.... 0.... 0...0 .0000 .0... .0000	..0.. .0000 .000. 0...0 00000 0.... .0000	.0.0. ..... .000. 0...0 00000 0.... .0000	.0... ..... .000. 0...0 00000 0.... .0000	.0.0. ....0.. 0...0 .0000 ..0.. ..0..	..0.. .0.0. ..... .0000 ..0.. ..0.. ..0..	.0... .0.0. .00.. 0...0 00000 ..0.. .000.	.0.0. ..... .000. 0...0 00000 0...0 0...0	..0.. .0.0. .000. .000. 0...0 00000 0...0
90H	...0. ..0.. 00000 0.... 0000. 0.... 00000	.... 00.0. ..0.0 .0000 0.0.. 00.00	.0000 0.0.. 0.0.. 0.000 000.. 0.0.. 0.000	..0.. .0.0. ..... .000. 0...0 0...0 .000.	.0.0. .... .000. 0...0 0...0 .000.	.0... ..0.. ..... .000. 0...0 0...0 .000.	..0.. .0.0. ..... 0...0 0...0 0..00 .00.0	.0... ..0.. ..... 0...0 0...0 0..00 .00.0	.0.0. ..... 0...0 .0000 0...0 0...0 0000.	.0.0. ..... .000. 0...0 0...0 0...0 .000.	.0.0. ..... 0...0 0...0 0...0 0...0 .000.	....0. 0.0. 0.0. 0...0 0.0. .0...	..00. .0..0 ..... 0000. 00000 .0... 00000	0...0 .0.0. ..0.. 00000 ..0.. ..0.. ..0..	0000. 0...0 0000. 0...0 0.0. 0.000 0..00	...0. ..0.0 ..0.. .000. ..0.. 0.0.. .0...
A0H	...0. ..0.. .000. ....0 .0000 0...0 .0000	...0. ..0.. ..... .00.. ..0.. ..0.. .000.	...0. ..0.. ..... .000. 0...0 0...0 .000.	...0. ..0.. ..... 0...0 0...0 0..00 .00.0	.00.0 0.00. ..... 0.00. 00..0 0...0 .000.	.00.0 0.00. ..... 00..0 0.0.0 0..00 0...0	.000. ....0 .0000 0...0 .0000 00000	.000. 0...0 0...0 0...0 .000. 00000	..0.. ....0.. .0... 0...0 .000.	.... 00000 0.... .... .000.	.... 00000 ....0 ....0 ..... .000.	0..0. 0.0.. 00... 0.00. 0..0. ...0. .0000	0..0. 0.0.. 00..0 0..00 ..0.0 .0000 0	..0.. ....0.. ..0.. ..0.. ..0.. ..0..	...0. ..0.0 .0.0. 0.0. ..0.0 ..0.0 ...0.	.0... 0.0.. ..0.. .0.0. ..0.0 0.0.. .0...
B0H	.0.0. 0.0.0 .0.0. 0.0.0 .0.0. 0.0.0 .0.0.	0.0.0 .0.0. 0.0.0 .0.0. 0.0.0 .0.0. 0.0.0	00000 00000 00000 00000 00000 00000 00000	..0.. ..0.. ..0.. ..0.. ..0.. ..0.. ..0..	..0.. ..0.. ..0.. 000.. ..0.. ..0.. ..0..	..0.. ..0.. 000.. ..0.. 000.. ..0.. ..0..	.0.0. .0.0. .0.0. 00.0. .0.0. .0.0. .0.0.	.... 0000. .0.0. .0.0. .0.0.	.... 000.. ..0.. 000.. ..0.. ..0..	.0.0. .0.0. 00.0. ...0. 00.0. .0.0. .0.0.	.0.0. .0.0. .0.0. .0.0. .0.0. .0.0. .0.0.	.... 0000. ...0. 00.0. .0.0. .0.0.	.0.0. .0.0. 00.0. ...0. 0000. ....

6.2.2 Page 1 (Katakana) (80H – FFH)

	00	01	02	03	04	05	06	07	08	09	0A	0B	0C	0D	0E	0F
80H	 00000	.... 00000 00000	.... 00000 00000 00000	.... 00000 00000 00000	.... 00000 00000 00000 00000	..... 00000 00000 00000 00000 00000	00000	00000 00000	00000 00000 00000	00000 00000 00000 00000	00000 00000 00000 00000 00000	00000 00000 00000 00000 00000	0.... 0.... 0.... 0.... 0.... 0....	00... 00... 00... 00... 00... 00...	000.. 000.. 000.. 000.. 000.. 000..	0000. 0000. 0000. 0000. 0000. 0000.
90H	....0 ....0 ....0 ....0 ....0 0	...00 ...00 ...00 ...00 ...00 ...00	..000 ..000 ..000 ..000 ..000 ..000	.0000 .0000 .0000 .0000 .0000 .0000	00000 00000 00000 00000 00000 00000	0.0.0 0.0.0 0.0.0 0.0.0 0.0.0 0.0.0	.0.0. 0.0.0 .0.0. 0.0.0 .0.0. 0.0.0	....0.. ...0. 00000 ...0. ..0..	....0.. .0... 00000 .0... ..0..	..0.. .000. 0.0.0 ..0.. ..0.. ..0..	..0.. ..0.. ..0.. .000. 0.0.0 ..0..	..... 0...0 .0.0. .0.0. 0...0 ..0..	....0.. ..... 00000 ..0.. ..0..	..0.. ..0.. ..... 00000 ..0.. ..0..	....0 ..00. 00... 00000 ....0 ..0..	0.... .00.. ...00 00000 .00.. 0....
A0H	....	.... 000.. 000.. 000..	..000 ..0.. ..0.. ..0..	....0.. ..0.. ..0.. 000..	.... 0.... .0... ..0..	.... .00.. .00..	..... 00000 ..... 00000 ....0 ...0. ..0..	.... 00000 ....0 ..00. ..0.. .0...	....0 ...0. ..0.. .00.. 0.0.. ..0..	....0.. 00000 0...0 ....0 ..00.	.... 00000 ..0.. ..0.. 00000	....0. 00000 ..00. .0.0. 0.0.0	.... .0... 00000 .0..0 .0.0. .0...	.... .000. ...0. 00000 00000	.... 0000. 0000. 0.0.0 ...0. 0000.	.... 0.0.0 0.0.0 ....0 ..00.
B0H	.... 00000	00000 ....0 ..0.0 ..00. ..0.. ..0.. .0...	....0 ...0. ..0.. .00.. 0.0.. ..0.. ..0..	..0.. 00000 0...0 0...0 ....0 ...0. ..0..	..... 00000 ..0.. ..0.. ..0.. ..0.. 00000	...0. 00000 ...0. ..00. .0.0. 0.0.0 ...0.	.0... 00000 .0..0 .0..0 .0..0 .0..0 0..0.	..0.. 00000 ..0.. 00000 ..0.. ..0.. ..0..	..... .0000 0..0 0...0 0...0 ....0 .00..	.0... .0000 0..0 ...0. ...0. ...0. ..0..	..... 00000 ....0 0..0. ....0 ....0 00000	.0.0. 00000 0.0.0 0.0.0 0.0.0 ...0. 0..0.	..... 00000 ....0 00..0 00000 ...0. 000..	..... .0... ....0 .0..0 .0.0. .0... 0...0	..... 00000 0..0 0...0 .0..0 ...0. ..000	..... 0...0 0...0 0...0 ....0 ..0.. .00..
C0H	..... .0000 .0..0 0.0.0 ...00 ...0. .00..	...0. 000.. ..0.. 00000 ..0.. ..0.. .0...	..... 0.0.0 0.0.0 0.0.0 ....0 ...0. ..0..	.000. ..... 00000 ..0.. ..0.. ..0.. .0...	.0... .0... .0... ..00. .0.0. .0... .0...	..0.. ..0.. 00000 ..0.. ..0.. 0.... 00000	..... .000. .... 0....	..... 00000 ....0 .0.0. ..0.. .0.0. ..0..	..0.. 00000 ...0. ..0.. .000. 0.0.0 ..0..	...0. ...0. ...0. ...0. ...0. ..0.. .0...	....0.. ...0. 0.0.0 0.0.0 0.0.0 ..0..	0.... 0.... 00000 0.... 0.... 0.... .0...	..... .0... 00000 0.0.0 ....0 ....0..	..... 00000 0.0.0 ...0. ....0 ....0..	..0.. 00000 ..0.. 0.0.0 ..0.. ....0.	..... 00000 0.0.0 ....0 0.0.0 ..0.. .00..
D0H	..... .000. ..... .000. ..... .000. 0	....0.. .0... 0.... 0...0 00000 0	....0 ....0 .0.0. ..0.. .0.0. 0....	..... .0... .0... 00000 ..0.. .0... ..000	.0... ..... 00000 .0..0 .0..0 .0... .0...	..... .000. ...0. ...0. ...0. ...0. 00000	..... 00000 00000 00000 ....0 00000	.000. ..... 00000 ....0 ....0 ...0. ..0..	0...0 ..... 0...0 0...0 0...0 ...0. ..0..	.... 0...0 0.0.0 0.0.0 0.0.0 0.00.	.... 0..... 0...0 0...0 0.0.0 00...	.... 00000 0...0 0...0 0...0 00000	..... 00000 0.... ....0 ....0 ...0. ..0..	..... 00... 0.0.. ....0 ....0 ...0. 000..	..0.. 0.0.. 000.. ....
E0H	..... 00000 0...0 0...0 0...0 00000	..... 00000 00000 00000 00000 00000	.... 000.. 000.. 000..	..... .000. 0...0 0...0 0...0 .000.	..... .000. 00000 00000 00000 .000.	....0.. .000. 0...0 .0.0. ..0..	....0.. .000. 00000 .000. ..0..	.... .0... .0... .0...	.... .00.. .00.. .0...	....0. ..00. ...0. ..00. ...0.	.... .000. .000. 00000	.... 00000 00000 ..0..	....0.0 .0... 0.0.. 0.0.. ..0..	..... 0.0.. .0.0. .0.0. .0.0. ..0..	..0.. ..0.. ..0.. 00000 ..0.. ..0.. 00000	..0.. ..0.. ..0.. 00000 .00.. .000. ..0..
F0H	00000 0...0 0...0 00000 0...0 0...0 00000	00000 0...0 00000 0...0 00000 0...0 0...0	..0.. 0.0.0 .000. ..0.. ..0.. .0.0. ..0..	..0.. ..0.0 0000. ..0.. .000. 0.0.0 ..0..	..0.. ..0.. 00000 ..0.. .000. 0.0.0 ..0..	..0.. .0.0. 00000 .00.. .000. .000. 00000	..0.. ..0.. 00000 ..0.. 00000 ..0.. 00000	.0... 00000 ..0.. 00000 00000 0.0.0 ..0..	00000 0.0.0 0.0.0 00000 0...0 0...0 0...0	..0.. ..0.. 0.0.0 00000 ..0.. 0.0.0 ..0..	..0.. ..0.. 00000 ..0.. 0.0.0 ..0.. 0...0	..0.. ..0.. 00000 ..0.. 0.0.0 0.0.0 ..0..	..0.. 0.0.0 00000 0.0.0 0.0.0 ..0.. ..0..	..0.. ..0.. 0.0.0 00000 0.0.0 ..0.. .00..	00000 ..... 00000 ..0.. ..0.. ..0.. ..0..	0.00. 00..0 .0... .0... .0... .0..0 ..00.

6.2.3 Page 2 (PC850: Multilingual) (80H – FFH)

	00	01	02	03	04	05	06	07	08	09	0A	0B	0C	0D	0E	0F
80H	.0000 0.... 0.... 0.... .0000 ..0.. .0...	.0.0. ..... 0...0 0...0 0...0 0..00 .00.0	...0. ..0.. .000. 0...0 00000 0.... .0000	..0.. .0.0. .000. ....0 .0000 0...0 .0000	.0.0. ..... .000. ....0 .0000 0...0 .0000	.0... ..0.. .000. ....0 .0000 0...0 .0000	..0.. .0.0. ..0.. ....0 .0000 0...0 .0000	..... .0000 0.... 0...0 .0000 ..0.. 0...	..0.. .0.0. .000. 0...0 00000 0.... .000.	.0.0. ..... .000. 0...0 00000 0.... .000.	.0... ..0.. .000. 0...0 00000 0.... .000.	.0.0. ....0.. 0...0 ..0.. ..0.. ..0..	..0.. .0.0. ..0.. ..0.. ..0.. ..0.. ..0..	.0... ..0.. .00.. ..0.. .000. ..0.. .000.	.0.0. ..... .000. 0...0 00000 0...0 0...0	..0.. .0.0. ..000 0...0 00000 0...0 0...0
90H	...0. ..0.. 00000 0.... 0000. 0.... 00000	.... 00.0. ..0.0 .0000 0.0.. 00.00	.0000 0.0.. 0.0.. 0.000 000.. 0.0.. 0.000	..0.. .0.0. ..... .000. 0...0 0...0 .000.	.0.0. .... .000. 0...0 0...0 .000.	.0... ..0.. ..... .000. 0...0 0...0 .000.	..0.. .0.0. ..... 0...0 0...0 0..00 .00.0	.0... ..0.. ..... 0...0 0...0 0..00 .00.0	.0.0. ..... 0...0 0...0 .0000 ....0 0000.	.0.0. ..... .000. 0...0 0...0 0...0 .000.	.0.0. ..... 0...0 0...0 0...0 0...0 .000.	....0. .000. 0.0.0 0.0.0 .0... 00000	..00. .0..0 .0... 0...0 .0... .0... .0...	...0. .000. 0.0.0 0.0.0 0.0.0 .000. 0.0..	..... 0...0 .0.0. .0.0. 0...0	...0. ..0.0 ..0.. .000. ..0.. 0.0.0 .0...
A0H	...0. ..0.. .000. ....0 .0000 0...0 .0000	...0. ..0.. ..... .00.. ..0.. ..0.. .000.	...0. ..0.. ..... .000. 0...0 0...0 .000.	...0. ..0.. ..... 0...0 0...0 0..00 .00.0	.00.0 0.00. ..... 0.00. 00..0 0..00 0...0	.00.0 0.00. ..... 00..0 0.0.0 0...0 0...0	.000. ....0 .0000 0...0 .0000 00000	.000. 0...0 0...0 0...0 .000. 00000	..0.. ....0.. 0...0 0...0 0...0 .000.	.000. 000.0 00.00 000.0 000.0 00.00 .000.	.... 00000 ....0 ....0 ....

6.2.4 Page 3 (PC860: Portuguese) (80H – FFH)

	00	01	02	03	04	05	06	07	08	09	0A	0B	0C	0D	0E	0F
80H	.0000 0.... 0.... 0.... .0000 ..0.. .0...	.0.0. ..... 0...0 0...0 0...0 0..00 .00.0	...0. ..0.. .000. 0...0 00000 0...0 .0000	..0.. .0.0. .000. ....0 0000. 0...0 .0000	.0.0. ..... .000. ....0 0...0 0...0 .0000	.0... ..0.. .000. ....0 0...0 0...0 .0000	...0. ..0.. .000. 0...0 0000. 0...0 0...0	..... .0000 0...0 0...0 0...0 0...0 .0...	..0.. .0.0. 0...0 0...0 0...0 0..00 .000.	..0.. .0.0. 00000 0...0 0...0 0...0 00000	.0... ..0.. .000. 0...0 0...0 0...0 0...0	.0.0. ..... 00000 0...0 0...0 0...0 0...0	..0.. ..... .0000 ..0.. 0...0 0...0 .000.	.0... ..... 00000 .000. .000. .000. .000.	.0.0. ..... .000. 0...0 0...0 0...0 0...0	..0.. .0.0. 00000 0...0 0...0 0...0 0...0
90H	...0. ..0.. 00000 0.... 0000. 0.... 00000	.0... ..0.. .000. 0...0 00000 0...0 0...0	.0... ..0.. 00000 0.... 0000. 0.... 00000	..0.. .0.0. ..... .000. 0...0 0...0 .000.	.0.0. ..... .000. .000. 0...0 0...0 .000.	.0... ..0.. ..... .000. 0...0 0...0 .000.	...0. ..0.. 0...0 0...0 0...0 0...0 .000.	.0... ..0.. ..... 0...0 0...0 0...0 .00.0	.0... ..0.. .000. ..0.. ..0.. ..0.. .000.	.0.0. ..... .000. 0...0 0...0 0...0 .000.	.0.0. ..... .000. 0...0 0...0 0...0 .000.	.... 0...0 0.0.. 0.0.. .0... .0...	..00. .0..0 0000. 0...0 .0... .0... 00000	.0... ..0.. 0...0 0...0 0...0 0...0 .000.	0000. 0...0 0000. 0.0. 0.000 0.0. 0..00	...0. ..0.. .000. 0...0 0...0 0...0 .000.
A0H	...0. ..0.. .000. ....0 .0000 0...0 .0000	...0. ..0.. ..... .00.. ..0.. ..0.. .000.	...0. ..0.. ..... .000. 0...0 0...0 .000.	...0. ..0.. ..... 0...0 0..00 0...0 .00.0	.00.0 0.00. ..... 0.00. 00..0 0..00 0...0	.00.0 0.00. ..... 00..0 0.0.0 0..00 0...0	.000. ....0 .0000 0...0 .0000 00000	.000. 0...0 0...0 0...0 .000. 00000	..0.. ....0.. 0...0 0...0 0...0 .000.	.0... ..0.. .000. 0...0 0...0 0...0 .000.	.... 00000 ....0 ....0 0	0..0. 0.0.. 00... 0.00. ..0.. ...0. .0000	0..0. 0.0.. 00..0 0..00 0...0 .0000 0	..0.. ....0.. ..0.. ..0.. ..0.. ..0..	...0. ..0.0 .0.0. 0.0.0 0.0.. 0.0.. ...0.	.0... 0.0.. .0.0. ..0.0 0.0.. 0.0.. .0...
B0H	.0.0. 0.0.0 .0.0. 0.0.0 .0.0. 0.0.0 .0.0.	0.0.0 .0.0. 0.0.0 .0.0. 0.0.0 .0.0. 0.0.0	00000 00000 00000 00000 00000 00000 00000	..0.. ..0.. ..0.. ..0.. ..0.. ..0.. ..0..	..0.. ..0.. ..0.. 000.. ..0.. ..0.. ..0..	..0.. ..0.. 000.. ..0.. 000.. ..0.. ..0..	.0.0. .0.0. .0.0. 00.0. .0.0. .0.0. .0.0.	.... 0000. .0.0. .0.0. .0.0.	.... 000.. ..0.. 000.. ..0.. ..0..	.0.0. .0.0. 00.0. ...0. 00.0. .0.0. .0.0.	.0.0. .0.0. .0.0. .0.0. .0.0. .0.0. .0.0.	.... 0000. .0.0. 00.0. .0.0. .0.0.	.0.0. .0.0. 00.0. ...0. 0000. ....

6.2.5 Page 4 (PC863: Canadian-French) (80H – FFH)

	00	01	02	03	04	05	06	07	08	09	0A	0B	0C	0D	0E	0F
80H	.0000 0.... 0.... 0.... .0000 ..0.. .0...	.0.0. ..... 0...0 0...0 0...0 0..00 .00.0	...0. ..0.. .000. 0...0 00000 0.... .0000	..0.. .0.0. .000. ....0 .0000 0...0 .0000	..0.. .0.0. .000. 0...0 00000 0...0 0...0	.0... ..0.. .000. ....0 .0000 0...0 .0000	.000. 00.0. .0.0. .0.0. .0.0. .0.0. .0.0.	..... .0000 0.... 0.... .0000 ..0.. .0...	..0.. .0.0. .000. 0...0 00000 0.... .000.	.0.0. ..... .000. 0...0 00000 0.... .000.	.0... ..0.. .000. 0...0 00000 0.... .000.	.0.0. ..... .000. ..0.. ..0.. ..0.. .000.	..0.. .0.0. .000. .00.. ..0.. ..0.. .000.	.... 00000 ..... 00000 ..... .000.	.0.0. ..... .000. 0...0 00000 0...0 0...0	.000. 0.... .000. 0...0 .000. ....0 .000.
90H	...0. ..0.. 00000 0.... 0000. 0.... 00000	.0... ..0.. 00000 0.... 0000. 0.... 00000	..0.. .0.0. 00000 0.... 0000. 0.... 00000	..0.. .0.0. ..... .000. 0...0 0...0 .000.	.0.0. ..... 00000 0.... 0000. 0.... 00000	.0.0. ..... .000. ..0.. ..0.. ..0.. .000.	..0.. .0.0. .000. 0...0 0...0 0..00 .00.0	.0... ..0.. 0...0 0...0 0...0 0..00 .00.0	0...0 .000. 0...0 0...0 0...0 0..00 0...0	..0.. .0.0. 0...0 0...0 0...0 0...0 .000.	.0.0. ..... 0...0 0...0 0...0 0...0 .000.	....0. .0000 0.0.. 0.0.. .0... .0000	..00. .0..0 0000. .0... .0... .0... 00000	.0... ..0.. 0...0 0...0 0...0 0...0 .000.	..0.. .0.0. ..... 0...0 0...0 0...0 .000.	...0. ..0.0 ....0.. .000. 0.0.. 0...0
A0H	..0.. ..0.. ..0.. ....0.. ..0.. ..0..	...0. ..0.. ..... .00.. ..0.. ..0.. .000.	...0. ..0..	...0. ..0.. .000. 0...0 0...0 0...0 .000.	...0. ..0.. ..... 0...0 0...0 0..00 .00.0	.0.0.	.... 0.00. .000.	00000	..0.. .0.0. ..... .000. ..0.. ..0.. .000.	.... .000. 0.... 0.... 0....	.... 00000 ....0 ....0 0	0..0. 0.0.. 00... 0.00. .0..0 .0..0 .0000	0..0. 0.0.. 00..0 0..00 ..0.0 .0000 0	00... ..0.. .0... .000. 00.00 ..000 0	...0. ..0.0 .0... 0.0.0 .0... ..0.0 ...0.	.0... 0.0.. 0.0.. 0.0.. ..0.0 0.0.. .0...
B0H	.0.0. 0.0.0 .0.0. 0.0.0 .0.0. 0.0.0 .0.0.	0.0.0 .0.0. 0.0.0 .0.0. 0.0.0 .0.0. 0.0.0	00000 00000 00000 00000 00000 00000 00000	..0.. ..0.. ..0.. ..0.. ..0.. ..0.. ..0..	..0.. ..0.. ..0.. 000.. ..0.. ..0.. ..0..	..0.. ..0.. 000.. ..0.. ..0.. ..0.. ..0..	.0.0. .0.0. .0.0. 00.0. .0.0. .0.0. .0.0.	.... 0000. .0.0. .0.0. .0.0.	..... 000.. 000.. ..0.. 000.. ..0.. ..0..	.0.0. .0.0. 00.0. ...0. 00.0. .0.0. .0.0.	.0.0. .0.0. .0.0. .0.0. .0.0. .0.0. .0.0.	.... 0000. ...0. 00.0. .0.0. .0.0.	.0.0. .0.0. 00.0. ...0. 0000.	.0.0. .0.0. .0.0. 0000.	..0.. ..0.. 000.. ..0.. 000..	.... 000.. ..0.. ..0.. ..0..
C0H	..0.. ..0.. ..0.. ..000	..0.. ..0.. ..0.. 00000	.... 00000 ..0.. ..0.. ..0..	..0.. ..0.. ..0.. ..000 ..0.. ..0.. ..0..	.... 00000	..0.. ..0.. ..0.. ..000 ..0.. ..0.. ..0..	..0.. ..0.. ..000 ..0.. ..000 ..0.. ..0..	.0.0. .0.0. .0.0. .0.00 .0.0. .0.0. .0.0.	.0.0. .0.0. .0.00 .0... .0000	.... .0000 ..0.. .0.00 .0.0. .0.0.	.0.0. .0.0. 00.00 ..... 00000	.... 00000 ..... 00.0. .0.0. .0.0.	.0.0. .0.0. .0.00 .0... .0.0. .0.0. .0.0.	.... 00000 ..... 00000	.0.0. .0.0. 00.00 ..... 00000 .0.0. .0.0.	..0.. ..0.. 00000 ..... 00000 ....
D0H	.0.0. .0.0. .0.0. 00000	.... 00000 ..... 00000 ..0.. ..0..	.... 00000 .0.0. .0.0. .0.0.	.0.0. .0.0. .0.0. .0000	..0.. ..0.. ..000 ..0.. ..000 ..0.. ..0..	....000 ..000 ....0.. ..0..	.... .0000 .0.0. ..000 .0.0. .0.0.	.0.0. .0.0. .0.0. .0.0. .0.0. .0.0. .0.0.	..0.. ..0.. 00000 ..0.. 00000 ..0.. ..0..	..0.. ..0.. ..... 000.. ....0..	....0.. ..0.. ..0..	00000 00000 00000 00000 00000 00000 00000	.... 00000 00000 00000 00000	000.. 000.. 000.. 000.. 000.. 000.. 000..	..000 ..000 ..000 ..000 ..000 ..000 ..000	00000 00000 00000 00000 ....
E0H	....0 ....0 .00.0 0..0. 0..0. 0.0.0 00..0	..00. .0..0 .000. .0..0 .0..0 .000. 00...	00000 0...0 0.... 0.... 0.... 0.... 0....	00000 .0.0. .0.0. .0.0. .0.0. .0.0. 0..00	00000 .0..0 ..0.. ...0. ..0.. .0..0 00000	..000 .0... .0.0. 0..0. 0...0 0..0. .00..	..... 0...0 0..00 0..00 000.0 0.... 0....	.... 00000 .0... .0... .0... ..00.	.000. .000. 0.0.0 0.0.0 0.0.0 0.0.0 .000.	.000. 0...0 0...0 00000 0...0 0...0 00.00	.000. 0...0 0...0 0...0 0.0.0 0...0 .0.0.	.0000 0.... .0... .000. 0...0 0...0 .000.	..... .0.0. 0.0.0 0.0.0	....0 ...0. .000. 0.0.0 0...0 0...0 .000.	.000. 0.... 0000. 0.... 0.... 0.... .000.	.000. 0...0 0...0 0...0 0...0 0...0 0...0
F0H	00000 .... 00000 00000	....0.. ..0.. 00000 ..0.. 00000	0.... .0... ..0.. ...0. 00000 00000	....0 ...0. ..0.. .0... 00000 00000	...0. ..0.0 ..0.. ..0.. ..0.. ..0.. ..0..	..0.. ..0.. ..0.. ..0.. ..0.. 0.0.. .0...	....0.. ..... 00000 ....0..	.00.0 0.00. ..... .00.0 0.00.	.000. .0.0. .000.	.... .00.. .00..	....0.. ..0.. ..0..	.0000 .0... .0... .0... .0... 00... .0...	.0.0. .00.0 .0..0 .0..0	..00. ..... .0..0 ..0.. .0000	..... 000.. 000.. 000.. 000.. 000..	....

6.2.6 Page 5 (PC865: Nordic) (80H – FFH)

	00	01	02	03	04	05	06	07	08	09	0A	0B	0C	0D	0E	0F
80H	.0000 0.... 0.... 0.... .0000 ..0.. .0...	.0.0. ..... 0...0 0...0 0...0 0..00 .00.0	...0. ..0.. .000. 0...0 00000 0.... .0000	..0.. .0.0. .000. ....0 .0000 0...0 .0000	.0.0. ..... .000. ....0 .0000 0...0 .0000	.0... ..0.. .000. ....0 .0000 0...0 .0000	..0.. .0.0. ..0.. .0000 .0000 ..0.. .0000	..... .0000 0.... 0...0 .0000 ..0.. 0...	..0.. .0.0. .000. 0...0 00000 0.... .000.	..0.. .0.0. 00000 0...0 0000. 0.... 00000	.0... ..0.. .000. 0...0 00000 0.... .000.	.0.0. ..... 00000 .00.. ..0.. ..0.. .000.	..0.. .0.0. ..... .00.. ..0.. ..0.. .000.	.0... ..... .000. .00.. ..0.. ..0.. .000.	.0.0. ..... .000. 0...0 00000 0...0 0...0	..0.. .0.0. ..0.. .000. 0...0 00000 0...0
90H	...0. ..0.. 00000 0.... 0000. 0.... 00000	.... 00.00 ..0.0 00000 0.0.. 00.00	.0000 0.0.. 0.0.. 0.0.. 000.. 0.0.. 0.000	..0.. .0.0. .... 0...0 0...0 .000.	.0.0. .... 0...0 0...0 .000.	.0... ..0.. .... 0...0 0...0 .000.	..0.. .0.0. ..... 0...0 0...0 0..00 .00.0	...0. ..0.. ..... 0...0 0...0 0..00 .00.0	.0.0. ..... 0...0 .0000 ....0 0000. .000.	.0.0. ..... .000. 0...0 0...0 0...0 .000.	.0.0. ..... 0...0 0...0 0...0 0...0 .000.	....0. .000. 0.0.0 0.0.0 .000. .0...	..00. .0..0 0...0 0...0 0.0.. .0... 00000	...0. .000. 0.0.0 0.0.0 0.0.0 .000. .0...	0000. 0...0 0.0.0 0000. 0.000 0.0. 0.0.0	...0. ..0.0 ..0.. .000. ..0.. 0.0.. .0...
A0H	...0. ..0.. .000. ....0 .0000 0...0 .0000	...0. ..0.. ..... .00.. ..0.. ..0.. .000.	...0. ..0.. ..... .000. 0...0 0...0 .000.	...0. ..0.. ..... 0...0 0...0 0..00 .00.0	.00.0 0.00. ..... 0.00. 00..0 0.0.0 00..0	.00.0 0.00. ..... 00..0 0.0.0 ..00. .00.0	.000. ....0 .0000 0...0 .0000 00000 00000	.000. 0...0 0...0 0...0 .000. 00000	..0.. ....0.. .0... 0... 0...0 .000.	.... 00000 0.... 0.... .... .000.	.... 00000 ....0 ....0 .... .000.	0.0. 0.0. 00... 0.00. ..0.0 ...0. .0000 .0000	0..0. 0.0.. 00..0 0..00 0..0 0000 0	..0.. ....0.. ..0.. ..0.. ..0.. ..0.. ..0..	...0. ..0.0 .0.0. 0.0.0 0.0.0 ..0.0 ...0. .0.0.	0...0 .000. 0...0 0...0 0...0 .000. 0...0 0...0
B0H	.0.0. 0.0.0 .0.0. 0.0.0 .0.0. 0.0.0 .0.0.	0.0.0 .0.0. 0.0.0 .0.0. 0.0.0 .0.0. 0.0.0	00000 00000 00000 00000 00000 00000 00000	..0.. ..0.. ..0.. ..0.. ..0.. ..0.. ..0..	..0.. ..0.. ..0.. 000.. ..0.. ..0.. ..0..	..0.. ..0.. 000.. ..0.. 000.. ..0.. ..0..	.0.0. .0.0. .0.0. 00.0. .0.0. .0.0. .0.0.	.... 000.. 0000. 000.. ..0.. ..0..	....0.. ..0.. ..0.. ..0.. ..0..	.0.0. .0.0. 00.0. ...0. 00.0. .0.0. .0.0.	.0.0. .0.0. .0.0. .0.0. .0.0. .0.0. .0.0.	.... 0000. .0.0. 00.0. .0.0. .0.0.	.0.0. .0.0. 00.0. ...0. 0000. ....

6.2.7 Page 6 (Slavonic) (80H – FFH)

	00	01	02	03	04	05	06	07	08	09	0A	0B	0C	0D	0E	0F
80H	.000. 0.... 0.... 0...0 .000. ...0. .000.	.0.0. .... 0...0 0...0 0...0 .000.	...0. ..0.. .000. 0...0 00000 0.... .0000	..0.. .0.0. .000. ....0 .0000 0...0 .0000	.0.0. ..... .000. ....0 .0000 0...0 .0000	..0.. .0.0. ..0.. 0...0 0...0 0...0 .000.	...0. ..0.. .0000 0.... 0.... 0.... .0000	.000. 0.... 0...0 ...0. .000. ...0. .000.	.00.. ..0.. ..00. 0...0 ..0.. ..0.. .000.	.0.0. ..... .000. 0...0 00000 0.... .0000	..0.0 .0.0. .000. 0...0 0...0 0...0 .000.	..0.0 .0.0. .000. 0...0 0...0 0...0 .000.	..0.. .0.0. .00.. .00.. 0...0 ..0.. .000.	...0. ..0.. 00000 ...0. ..0.. .0... 00000	.0.0. ..... .000. ....0 .0000 0...0 .0000	...0. ..0.. 00000 0.... 0.... 0.... 0000
90H	...0. ..0.. .000. 0...0 00000 0.... .0000	...0. ..0.. 0.... 0.... 0.... 0.... 0000.	...0. ..0.. ..... .00.. ..0.. ..0.. .000.	..0.. .0.0. .000. 0...0 0...0 0...0 .000.	.0.0. ..... .000. 0...0 0...0 0...0 .000.	.0.0. ..0.. 0.... 0.... 0.... 0.... 0000.	.0.0. ..0.. ..... .00.. ..0.. ..0.. .000.	....0 ...0. .0000 0.... .000. ....0 0000.	....0 ...0. .0000 0.... .000. ....0 0000.	.0.0. ..... .000. 0...0 0...0 0...0 .000.	.0.0. ..... .000. 0...0 0...0 0...0 .000.	.0.0. ..0.. .000. .000. 0...0 ..0.. ...0.	.0.0. ..0.. .000. .000. 0...0 ..0.. ...0.	.00.. ..0.. ..00. ..0.. ..00. ..0.. .000.	.... 0...0 .0.0. .00.. ..0.. 0...0	.0.0. ..0.. .0000 0.... 0.... 0.... .0000
A0H	...0. ..0.. .000. ....0 .0000 0...0 .0000	...0. ..0.. ..... .00.. ..0.. ..0.. .000.	...0. ..0.. .000. 0...0 0...0 0...0 .000.	...0. ..0.. ..... 0...0 0...0 0...0 .000.	.000. ....0 .0000 0...0 .0000 ..0.. ..000	.000. ....0 .0000 0...0 .0000 ..0.. ..000	.0.0. ..0.. 00000 0...0 ..0.. .0... 00000	.0.0. ..0.. 00000 0...0 ..0.. .0... 00000	.000. 0...0 00000 0.... 0000. ..0.. ..000	.000. 0...0 00000 0.... .0000 ..0.. ..000	....	...0. ..0.. 00000 ...0. ..0.. .0... 00000	.0.0. ..0.. .0000 0.... 0.... 0.... .0000	.0000 0.... .000. ....0 0000. ..0.. ..000	...0. ..0.0 .0.0. 0.0.0 .0.0. ..0.0 ...0.	.0... 0.0.. .0.0. ..0.0 .0.0. 0.0.. .0...
B0H	0.0.0 ..... 0.0.0 ..... 0.0.0 ..... 0.0.0	0.0.0 .0.0. 0.0.0 .0.0. 0.0.0 .0.0. 0.0.0	00.00 .000. 00.00 .000. 00.00 .000. 00.00	..0.. ..0.. ..0..

6.2.8 Page 7 (Russia) (80H – FFH)

	00	01	02	03	04	05	06	07	08	09	0A	0B	0C	0D	0E	0F
80H	.000. 0...0 0...0 00000 0...0 0...0 0...0	00000 0.... 0.... 0000. 0...0 0...0 0000.	0000. .0..0 .0..0 .000. .0..0 .0..0 0000.	00000 0...0 0... 0... 0... 0... 0... 0...	..00. 0..0 0...0 0...0 0..0 0..0 .000. 0...0	00000 0... 0... 0... 0... 0... 0... 00000	0.0.0 0.0.0 0...0 .000. .000. .000. 0.0.0 0.0.0	.000. 0...0 0...0 ....0 .000. ....0 0.0.0 .000.	0...0 0...0 0...0 0..00 0..0 00..0 0...0 0...0	.0.0. ..0.. 0..00 0...0 0.0.0 0.0.0 00..0 0...0	0...0 0..0. 0..0. 0..0. 0..0. 0..0. 0...0 0...0	..000 ..0.0 ..0.0 ..0.0 ..0.0 ..0.0 ..0.0 0...0	0...0 00.00 0.0.0 0...0 0...0 0...0 0...0 0...0	0...0 0...0 0...0 00000 0...0 0...0 0...0 0...0	.000. 0...0 0...0 0...0 0...0 0...0 0...0 .000.	00000 0...0 0...0 0...0 0...0 0...0 0...0 0...0
90H	0000. 0...0 0...0 0000. 0.... 0.... 0.... 0....	.000. 0...0 0.... 0.... 0.... 0...0 .000. 0000.	00000 ..0.. ..0.. ..0.. ..0.. ..0.. ..0.. ..0..	0...0 0...0 0...0 .0000 ....0 ....0 ....0 0000.	..0.. .000. 0.0.0 0.0.0 0.0.0 0.0.0 .000. ..0..	0...0 0...0 .0.0. ..0.. .0.0. 0000. 0...0 0...0	0..0. 0..0. 0..0. 0..0. 0..0. ...0. ....0 0	0...0 0...0 0...0 00000 ....0 ....0 ....0 0	0.0.0 ..... 0.0.0 0.0.0 0.0.0 0.0.0 0.0.0 .0.0.	0.0.0 ..... 0.0.0 0.0.0 0.0.0 0.0.0 .0.0.	0.... 0.... 0000. 0...0 0...0 0...0 0...0 0000.	0...0 0...0 0...0 00..0 0.0.0 0.0.0 00..0 00..0	00... .0... .0... .0000 .0..0 .0..0 .0..0 .0000	.000. 0...0 ....0 00000 ....0 0...0 0...0 .000.	0..0. 0.0.0 0.0.0 0.0.0 0.0.0 0.0.0 0.0.0 0..0.	.0000 0...0 0...0 .0000 ..0.0 ..0.0 .0..0 0...0
A0H	.... .00.. ...0. .000. 0..0. .00.0	.... 00000 0.... 0000. 0...0 0000.	.... 0000. 0...0 0000. 0...0 0000.	.... 00000 0.... 0.... 0.... 0....	....00. .0..0 .000. 0...0 0...0	.... .000. 0...0 00000 0.... .0000	.... 0.0.0 .000. .000. .000. 0.0.0	.... .000. 0...0 ...0. 0...0 .000.	.... 0...0 0..00 0.0.0 00..0 0...0	00000 ..... 0...0 0..00 0.0.0 00..0 0...0	.... 0..0. 0.0.. 00... 0.0.. 0...0	....000 ..0.0 0.0.0 ..0.0 0...0	.... .0.0. 0.0.0 0.0.0 0.0.0 0...0	.... 0...0 0...0 00000 0...0 0...0	.... .000. 0...0 0...0 0...0 .000.	.... 00000 0...0 0...0 0...0 0...0
B0H	....	....	....	....	....	....	....	....	....	....	....	....	....	....	....	....
C0H	....	....	....	....	....	....	....	....	....	....	....	....	....	....	....	....
D0H	....	....	....	....	....	....	....	....	....	....	....	....	....	....	....	....
E0H	..... 0000. 0...0 0...0 0000. 0.... 0....	..... .0000 0.... 0.... 0.... .0000	..... 00000 ..0.. ..0.. ..0.. ..0..	..... 0...0 .0.0. ..0.. .0... 0....	..0.. .000. 0.0.0 0.0.0 0.0.0 .000. ..0..	..... 0...0 .0.0. .0.0. .0.0. 0...0	..... 0..0. 0..0. 0..0. 0..0. 00000 0	..... 0..0. 0..0. 0..0. 0000. ...0.	..... 0.0.0 0.0.0 0.0.0 0.0.0 00000	..... 0.0.0 0.0.0 0.0.0 0.0.0 00000 0	..... 0.... 0.... 000.. 0..0. 0..0. 000.. ..... 000.0	..... 0...0 000.0 000.0 0..00 0..00 000.0	..... 00... .0... .000. .0..0 .0..0 .000.	.... 0000. ....0 00000 ....0 0000.	..... 0..0. 0.0.0 00..0 0.0.0 0..0.	..... 0000 0...0 0.000 ..0.. ..0.. .....
F0H	.000. 0...0 ....0 .0000 0...0 0...0 .000.	.0000 .0... .0... 000.. .0... .0... .0...	0..0. 0.0.. 00... 00... 0.0.. 0..00 0...0	0..0. 0..0. 0000. 0..0. 0..0. 0..00 0...0	.000. 0...0 0...0 00000 0...0 0...0 .000.	0...0 .0.0. ..0.. .000. ..0.. ..0.. ..0..	0...0 .0.0. ..0.. ..0.. ..0.. ..0.. ..0..	0.... 0.... 0000. 0...0 0...0 0...0 0...0	.... 0000. ....0 .0000 0...0 .000.	.... .0000 .0... 0000. 0...0 .0...	..... 0..0. 0.0.. 0.0.. 0.0.. 0..00 0...0	..... 0.0.. 0.0.. 00... 0...0 0..00 0...0	.... .000. 00000 .000. 0...0 .000.	.... 0...0 .0.0. ..0.. ..0.. ..0..	.... 0...0 .0.0. .000. ..0.. ..0..	....

6.2.9 Page 19 (PC858 Euro) (80H – FFH)

	00	01	02	03	04	05	06	07	08	09	0A	0B	0C	0D	0E	0F
80H	.000. 0...0 0.... 0...0 .000. ..0.. 000..	.0.0. ..... 0...0 0...0 0...0 0..00 .00.0	...0. ..0.. .000. .....0 00000 0.... .000.	..0.. .0.0. .000. .....0 .0000 0...0 .0000	.0.0. ..... .000. .....0 .0000 0...0 .0000	.0... ..0.. .000. .....0 .0000 0...0 .0000	..00. .00.0 .000. .....0 .0000 0...0 .0000	..... .0000 0.... .....0 .0000 ...0. .000.	..0.. .0.0. .000. 0...0 00000 0.... .000.	.0.0. ..... .000. 0...0 00000 0.... .000.	.0... ..0.. .000. 0...0 00000 0.... .000.	.0.0. ..... .00.. 0...0 ..000. ..0.. .000.	..0.. .0.0. ....0 .00.. ..0.. .000.	.0... ..... .00.. .....0 ..000. ..0.. .000.	.0.0. ..0.. ..... 0...0 00000 0...0 0...0	.000. .0.0. .000. 0...0 00000 0...0 0...0
90H	...0. ..0.. 00000 0.... 0000. 0.... 00000	.... 00.0. ..0.0 .0000 0.0.. .0000	..000 .0.0. 0..0. 0..00 0000. 0..0. 0..00	..0.. .0.0. ..... .000. 0...0 0...0 .000.	.0.0. .... .000. 0...0 0...0 .000.	.0... ..0.. ..... .000. 0...0 0...0 .000.	..0.. .0.0. ..... 0...0 0...0 0..00 .00.0	.0... ..0.. ..... 0...0 0...0 0..00 .00.0	.0.0. ..... 0...0 0...0 .0000 ....0 .000.	.0.0. ..... 0...0 0...0 0...0 0...0 .000.	.0.0. ..... 0...0 0...0 0...0 0...0 .000.	....0 0.0.0 0.0.0 0.0.0 .000. 0....	..00. .0..0 0000. .0... .0... 00000	....0 .000. 0.0.0 0.0.0 0.0.0 0.0.0 0....	..... 0...0 .0.0. ..0.. 0.0.0	...0. ..0.0 .000. ..0.. ..0.. 0.0.. .0...
A0H	...0. ..0.. .000. ....0 .0000 0...0 .0000	...0. ..0.. ..... .00.. ..0.. ..0.. .000.	...0. ..0.. ..... .000. 0...0 0...0 .000.	...0. ..0.. 0...0 0...0 0...0 0..00 .00.0	.0..0 0.00. ..... 0.00. 00..0 0..00 0...0	.0..0 0.00. ..... 00..0 0.0.0 0...0 0...0	.000. ....0 .0000 0...0 .0000 00000	..... .000. 0...0 0...0 .000. 00000	..0.. ....0.. 0.0.. 0...0 0...0 .000.	..... 00... 0.0.. 00... 00... 0.0..	.... 00000 ....0	0..0. 0.0.. 00... 0.0.0 .0..0 ...0. .0000	0...0 0..0. 0.0.0 0.0.0 0.0.0 .0000 .0000	..0.. .... 0.00. ..0.. ..0.. ..0..	....0.0 .0.0. 0.0.0 .0.0. ..0.0	..... 0.0.. .0.0. ..0.0 .0.0. 0.0.. .....
B0H	..0.. 0...0 ..0.. 0...0 ..0.. 0...0 ..0..	.0.0. 0.0.0 .0.0. 0.0.0 .0.0. 0.0.0 .0.0.	0.0.0 .0.0. 0.0.0 .0.0. 0.0.0 .0.0. 0.0.0	..0.. ..0.. ..0.. ..0.. ..0.. ..0.. ..0..	..0.. ..0.. ..0.. 000.. ..0.. ..0.. ..0..	...0. ..0.. .000. 0...0 00000 0...0 0...0	..0.. .0.0. .000. 0...0 00000 0...0 0...0	.0... ..0.. .000. 0...0 00000 0...0 0...0	....00. .0... 0...0 .0... ..00.	..00. ..00. 0000. 0000. ..00. ..00. ..00.	..00. ..00. ..00. ..00. ..00. ..00. ..00.	.... 0000. 0000. ..00. ..00. ..00.	..00. ..00. 0000. 0000.	....0.. .0000 ..0.. 0.0.. ..0.. ..0..	0...0 .0.0. 00000 00000 ..0.. ..0.. ..0..	....0.. 000.. 00000 ..0.. ..0..
C0H	..0.. ..0.. ..0.. ..000	..0.. ..0.. ..0.. 00000	.... 00000 ..0.. ..0.. ..0..	..0.. ..0.. ..0.. ..000 ..0.. ..0.. ..0..	.... 00000	..0.. ..0.. ..0.. 00000 ..0.. ..0.. ..0..	.0..0 0.00. .000. ....0 .0000 0...0 0...0	.0..0 0.00. .000. 0...0 00000 0...0 0...0	..00. ..00. ..000 ..000 ....00. ..00.	....000 ..000 ..00. ..00. ..00.	..00. ..00. 00000 00000 ....00. ..00.	.... 00000 00000 ..00. ..00. ..00.	..00. ..00. ..000 ..000 ..00. ..00. ..00.	.... 00000 00000	..00. ..00. .000. 0...0 ..00. ..00. ..00.	..... 0...0 .000. 0...0 ..00. ..00. ..00.
D0H	.0.0. ..0.. .0.0. ....0 .0000 0...0 .000.	000.. .0.0. .0..0 000.0 .0..0 .0.0. 000..	..0.. .0.0. 00000 0.... 0000. 0.... 00000	.0.0. ..... 00000 0.... 0000. 0.... 00000	.0... ..0.. 00000 0.... 0000. 0.... 00000	..00. .0..0 000.. .0... 000.. .0..0 ..00.	...0. ..0.. .000. ..0.. ..0.. ..0.. .000.	..0.. .0.0. .000. ..0.. ..0.. ..0.. .000.	.0.0. ..... .000. ..0.. ..0.. ..0.. .000.	..0.. ..0.. ..0.. 000..	....0.. ..0.. ..000 ..0.. ..0.. ..0..	00000 00000 00000 00000 00000 00000 00000	.... 00000 00000 00000 00000	..0.. ..0.. ..0.. ..0.. ..0.. ..0.. ..0..	.0... ..0.. .000. ....0.. ..0.. .000.	00000 00000 00000 ....
E0H	...0. ..0.. .000. 0...0 0...0 0...0 .000.	..00. .0..0 .000. .0..0 .0..0 .000. 00...	..0.. .0.0. .000. 0...0 0...0 0...0 .000.	.0... ..0.. .000. 0...0 0...0 0...0 .000.	.0..0 0.00. ..... .000. 0...0 0...0 .000.	.0..0 0.00. .000. 0...0 0...0 0...0 .000.	.... 0..0. 0..0. 0..0. 000.0 0....	00... .000. .000. 0...0 .0... .0... 000..	000.. .000. .0..0 0...0 .000. .000. 000..	...0. ..0.. 0...0 0...0 0...0 0...0 .000.	..0.. .0.0. 0...0 0...0 0...0 0...0 .000.	.0... ..0.. 0...0 0...0 0...0 0...0 .000.	...0. ..0.. 0...0 0...0 .0000 ....0 .000.	...0. 0.0.0 .0.0. 0...0 ..0.. ..0.. .000.	00000	...0. ..0.. ....
F0H	00000	...0. ..0..	.... 00000 ..0.. ..0.. ..0..	..0.. ..0.. 00000 ..0.. ..0..	....0.. 00.. ..... 00000	00... ..0.. 00... ..0.0 00.00 ..000 ..0..	.0000 000.0 000.0 .00.0 ..0.0 .00.. .00..	.00.. .00.. ..... 00000 .... .000.	....0. .000.	.00.. 0..0. .00..	.0.0.	.... .00.. .00..	..0.. .00.. ..0.. ..0.. .000.	000.. ...0. 000.. 000.. 000..	.... 0000. 0000. 0000. 0000.	....

6.2.10 Page 16 (WPC1252) (80H – FFH)

	00	01	02	03	04	05	06	07	08	09	0A	0B	0C	0D	0E	0F
80H	..00.	.0.0.	.....	...00	.....	.....	..0..	..0..	..0..	00...	.0.0.	.....	.0000	.....	.0.0.	.....
	.0..0	.....	.....	..0..	.....	.....	..0..	..0..	.0.0.	00..0	..0..	.....	0.0..	.....	..0..	.....
	000..	.....	.....	00000	.....	.....	00000	00000	.....	..00.	.0000	...0.	0.0..	.....	00000	.....
	.0...	.....	.....	..0..	.....	.....	..0..	..0..	.....	00...	0....	..0..	0.000	.....	...0.	.....
	000..	.....	..00.	..0..	00.00	.....	..0..	00000	.....	.....	.000.	.0...	0.0..	.....	..0..	.....
	.0..0	.....	...0.	..0..	.0..0	.....	..0..	..0..	.....	00.00	0	..0..	0.0..	.....	.0...	.....
	..00.	.....	..0..	00...	0..0.	0.0.0	..0..	..0..	.....	00.00	0000.	...0.	.0000	.....	00000	.....
90H	.....	...0.	..00.	.0..0	00.00	.....	.....	.....	.00.0	000.0	.0.0.	.....	.....	.....	..0.0	.0.0.
	.....	..0..	...0.	0..0.	.0..0	.....	.....	.....	0..0.	.0.00	..0..	.....	.....	.....	...0.	.....
	.....	..00.	..0..	00.00	0..0.	..0..	.....	.....	.....	.0..0	.000.	.0...	.0.00	.....	.....	0...0
	.....	.....	.....	.....	.....	.000.	.0000	00000	.....	.....	0....	..0..	0.0.0	.....	00000	.0.0.
	.....	.....	.....	.....	.....	.000.	.....	.....	.....	.....	.000.	...0.	0.000	.....	...0.	..0..
	.....	.....	.....	.....	.....	..0..	.....	.....	.....	.....	0	..0..	0.0..	.....	..0..	..0..
	.....	.....	.....	.....	.....	.....	.....	.....	.....	.....	.000.	.0...	.0.00	.....	00000	..0..
A0H	.....	..0..	.....	..00.	.....	0...0	..0..	.000.	.0.0.	.000.	..00.	.....	.....	.....	0000.	.000.
	.....	.....	..0..	.0..0	0...0	.0.0.	..0..	0....	.....	0...0	0	.....	.....	.....	0	.....
	.....	.....	.0000	0...	.000.	00000	..0..	.000.	.....	.00.0	..000	..0.0	.....	.....	000.0	.....
	.....	..0..	0.0..	0000.	0...0	..0..	.....	0...0	.....	.0..0	.0..0	.0.0.	00000	.000.	00..0	.....
	.....	..0..	0.0..	.0...	0...0	00000	..0..	.000.	.....	.00.0	..000	0.0..	0	.....	0.0.0	.....
	.....	..0..	.0000	0...	.000.	..0..	..0..	0	.....	0...0	.....	.0.0.	0	.....	0	.....
	.....	..0..	..0..	0.000	0...0	..0..	..0..	.000.	.....	.000.	.....	..0.0	.....	.....	0000.	.....
B0H	..00.	..0..	.00..	.00..	...0.	.....	.0000	.....	.....	..0..	..00.	.....	0...0	0..0.	00..0	..0..
	.0..0	..0..	0..0.	0..0.	..0..	.....	000.0	.....	.....	.00..	.0..0	.....	0..0.	0.0..	.0.0.	.....
	.0..0	00000	..0..	..0..	.....	0..0.	000.0	.....	.....	..0..	.0..0	0.0..	0.0.0	.0...	00..0	..0..
	..00.	..0..	.0...	0..0.	.....	0..0.	.00.0	.....	.....	..0..	..00.	.0.0.	.0.00	0.000	.0.00	.0...
	.....	..0..	0000.	.00..	.....	0..0.	..0.0	..00.	0	.000.	.....	..0.0	0.0.0	0	000.0	0...0
	.....	.....	.....	.....	.....	000.0	..0.0	..00.	0	.....	.....	.0.0.	..000	...0.	..000	0...0
	.....	00000	.....	.....	.....	0....	..0.0	.....	..000	.....	.....	0.0..	0	..000	0...0	.000.
C0H	.0...	...0.	.000.	.00.0	0...0	.000.	.0000	.000.	.0...	...0.	..0..	.0.0.	.0...	...0.	..0..	.0.0.
	..0..	..0..	0...0	0..0.	.....	.0.0.	0.0..	0...0	..0..	..0..	.0.0.	.....	..0..	..0..	.0.0.	.....
	..0..	..0..	..0..	..0..	..0..	.000.	0.0..	0....	00000	00000	00000	00000	.000.	.000.	.000.	.000.
	.0.0.	.0.0.	.0.0.	.0.0.	.0.0.	.0.0.	0.000	0...0	0....	0....	0....	0....	..0..	..0..	..0..	..0..
	0...0	0...0	0...0	0...0	0...0	0...0	000..	.000.	00000	00000	00000	00000	..0..	..0..	..0..	..0..
	00000	00000	00000	00000	00000	00000	0.0..	..0..	0....	0....	0....	0....	..0..	..0..	..0..	..0..
	0...0	0...0	0...0	0...0	0...0	0...0	0.000	.00..	00000	00000	00000	00000	.000.	.000.	.000.	.000.
D0H	.000.	.00.0	.0...	...0.	.000.	.00.0	.0.0.	.....	.00.0	.0...	...0.	..0..	.0.0.	...0.	0....	.00..
	.0..0	0..0.	..0..	..0..	0...0	0..0.	.....	0...0	0..0.	..0..	..0..	.0.0.	.....	..0..	0000.	0..0.
	.0..0	.....	.000.	.000.	.000.	.000.	.000.	.0.0.	0.0.0	0...0	0...0	.....	0...0	0...0	0...0	0..0.
	000.0	00..0	0...0	0...0	0...0	0...0	0...0	..0..	0.0.0	0...0	0...0	0...0	0...0	.0.0.	0...0	0.0..
	.0..0	0.0.0	0...0	0...0	0...0	0...0	0...0	.0.0.	0.0.0	0...0	0...0	0...0	0...0	..0..	0000.	0..0.
	.0..0	0..00	0...0	0...0	0...0	0...0	0...0	0...0	.0..0	0...0	0...0	0...0	0...0	..0..	0....	0..0.
	.000.	0...0	.000.	.000.	.000.	.000.	.000.	.....	0.00.	.000.	.000.	.000.	.000.	..0..	0....	0.0..
E0H	.0...	..0..	.000.	.00.0	.0.0.	..00.	.....	.....	.0...	...0.	.000.	.0.0.	.0...	...0.	.000.	.0.0.
	..0..	.0...	0...0	0..0.	.....	.0..0	.....	.0000	..0..	..0..	0...0	.....	..0..	..0..	0...0	.....
	.000.	.000.	..00.	..00.	.000.	.000.	00.0.	0....	.000.	.000.	.000.	.000.	.....	.....	.....	.00..
	0	0	0	0	0	0	..0.0	0....	0...0	0...0	0...0	0...0	.00..	.00..	.00..	..0..
	.0000	.0000	.0000	.0000	.0000	.0000	.0000	.0000	00000	00000	00000	00000	..0..	..0..	..0..	..0..
	0...0	0...0	0...0	0...0	0...0	0...0	0.0..	...0.	0....	0....	0....	0....	..0..	..0..	..0..	..0..
	.0000	.0000	.000.	.0000	.0000	.0000	00.00	.000.	.0000	.0000	.0000	.0000	.000.	.000.	.000.	.000.
F0H	.0..0	.00.0	.0...	...0.	..0..	.00.0	.0.0.	..00.	.....	.0...	...0.	..0..	.0.0.	...0.	0....	.0.0.
	..00.	0..0.	..0..	..0..	.0.0.	0..0.	.....	..00.	.....	..0..	..0..	.0.0.	.....	..0..	0....	.....
	.0.0.	.....	.....	.....	.....	.....	.....	.....	.00.0	0...0	0...0	0...0	0...0	0...0	0000.	0...0
	0	0.00.	.000.	.000.	.000.	.000.	.000.	.0000	0..0.	0...0	0...0	0...0	0...0	0...0	0...0	0...0
	.0000	00..0	0...0	0...0	0...0	0...0	0...0	.....	0.0.0	0...0	0...0	0...0	0...0	.0000	0000.	.0000
	0...0	0...0	0...0	0...0	0...0	0...0	0...0	..00.	.0..0	0..00	0..00	0..00	0..00	0	0....	0
	.000.	0...0	.000.	.000.	.000.	.000.	.000.	..00.	0.00.	.00.0	.00.0	.00.0	.00.0	.000.	0....	.000.

6.2.11 Page 12 (Greek) (80H – FFH)

	00	01	02	03	04	05	06	07	08	09	0A	0B	0C	0D	0E	0F
80H	.000. 0...0 0...0 0...0 00000 0...0 0...0	0000. 0...0 0...0 0000. 0...0 0...0 0000.	00000 0...0 0.... 0.... 0.... 0.... 00...	....0.. .0.0. 0...0 0...0 0...0 00000	00000 0.... 0.... 0000. 0.... 0.... 00000	00000 ....0 ...0. ..0.. .0... 0.... 00000	0...0 0...0 0...0 00000 0...0 0...0 0...0	.000. 0...0 00.00 00000 00.00 0...0 .000.	.000. ..0.. ..0.. ..0.. ..0.. ..0.. .000.	0...0 0.0.. 0.0.. 00... 0.0.. 0.0.. 0...0	....0.. .0.0. 0...0 0...0 0...0 0...0	0...0 00.00 0.0.0 0...0 0...0 0...0 0...0	0...0 0...0 00.0 0...0 0..00 0...0 0...0	00000 .... .000. 00000	.000. 0...0 0...0 0...0 0...0 0...0 .000.	00000 .0.0. .0.0. .0.0. .0.0. .0.0. .0.0.
90H	0000. 0...0 0...0 0000. 0.... 0.... 0....	00000 0...0 0.... .0... ..0.. .0..0 00000	00000 ..0.. ..0.. ..0.. ..0.. ..0.. ..0..	0...0 0...0 .0.0. ..0.. ..0.. ..0.. ..0..	00000 ..0.. 00000 0.0.0 00000 ..0.. 00000	0...0 0...0 .0.0. ..0.. .0.0. 0...0 0...0	0.0.0 0.0.0 0.0.0 0.0.0 .000. ..0.. .000.	.000. 0...0 0...0 0...0 0...0 0...0 00.00	.... .000. 0.0. 0..0. 0..0. .0000	..00. .0..0 .000. .0..0 .0..0 .000. 00...	..... 0...0 0...0 0...0 0...0 ..0.. ..0..	.0000 0.... .0... .000. 0...0 0...0 .000.	.... .0000 0.... 00000 0.... .0000	00000 ...0. ..0.. .0... .0... ..000 ...0.	.... 0.00. 00..0 00..0 0...0 0...0	.000. 0...0 0...0 000.0 ....0 0...0 .000.
A0H	....0.. ..0.. ..0.. ..0.. ..0.. ...0.	.... 0...0 0..0. 000.. 0..0. 0...0	.... .0... ..0.. ..0.. .0.0. 0...0	..... 0..0. 0...0 0..0. 000.0 0.... 0....	.... 0...0 0...0 0...0 .0.0. ..0..	0000. ..0.. .0... 0000. ..0.. .0... 0000.	.... .000. 0...0 0...0 0...0 .000.	.... 00000 .0.0. .0.0. .0.0. 0.0.0	.... 0000. 0...0 0000. 0.... 0....	.... .0000 0.0.. 0..0. 0..0. .00..	.... .0000 0.... .000. 0..0. 0000.	.... 00000 .0... .0... .0... ..00.	.... 0...0 0...0 0...0 0...0 .000.	..0.. .000. 0.0.0 0.0.0 0.0.0 0.0.0 ..0..	.... 0...0 .0.0. 0.0.0 ..0.. 0...0	.... 0.0.0 0.0.0 0.0.0 .000. ..0..
B0H	....	....	....	....	....	....	....	....	....	....	....	....	....	....	....	....
C0H	....	....	....	....	....	....	....	....	....	....	....	....	....	....	....	....
D0H	....	....	....	....	....	....	....	....	....	....	....	....	....	....	....	....
E0H	.... 0...0 0...0 0.0.0 0.0.0 .000.	....	....	....	....	....	....	....	....	....	....	....	....	....	....	....
F0H	....	....	....	....	....	....	....	....	....	..00. .0..0 .0... 0000. .0... .0... 00000	....	....	....	....	....	....

6.2.12 Page 26 (WPC-1257) (80H – FFH)

	00	01	02	03	04	05	06	07	08	09	0A	0B	0C	0D	0E	0F
80H	..00.	.....	.....	.....	.....	.....	.....	.....	.....	00..0	.....	.....	.....	.....	.....	.....
	.0..0	.....	.....	.....	.....	.....	..0..	..0..	.....	00.0.	.....	...0.	.....	.....	0...0	.....
	000..	.....	.....	.....	.....	.....	00000	00000	.....	..0..	.....	..0..	.....	.0.0.	.0.0.	.....
	.0...	.....	.....	.....	.....	.....	..0..	..0..	.....	.0...	.....	.0...	.....	.....	..0..	.....
	000..	.....	.....	.....	.....	.....	..0..	00000	.....	0....	.....	..0..	.....	.....	.....	.....
	.0.	.....	...0.	.....	.0.0.	.....	..0..	..0..	.....	00.00	.....	...0.	.....	.....	.....	...0.
	..00.	.....	..0..	.....	0.0..	0.0.0	.....	.....	.....	00.00	.....	.....	.....	.....	.....	..0..
90H	.....	.0...	...0.	.0.0.	.0.0.	.....	.....	.....	.....	000..	.....	.....	.....	00000	.....	.....
	.....	..0..	..0..	..0.0	0.0..	.....	.....	.....	.....	.0...	.....	.0...	.....	.....	.....	.....
	.....	.....	.....	.....	.....	.000.	.000.	00000	.....	.00.0	.....	..0..	.....	.....	.....	.....
	.....	.....	.....	.....	.....	.000.	.....	.....	.....	.0000	.....	...0.	.....	.....	.....	.....
	.....	.....	.....	.....	.....	.000.	.....	.....	.....	.0000	.....	..0..	.....	.....	.....	.....
	.....	.....	.....	.....	.....	.....	.....	.....	.....	..0.0	.....	.0...	.....	.....	..0..	.....
	.....	.....	.....	.....	.....	.....	.....	.....	.....	..0.0	.....	.....	.....	.....	...0.	.....
A0H	.....	.....	..0..	..00.	.....	.....	...0.	.0000	...0.	.000.	0000.	.....	.....	.....	.000.	.0000
	.....	.....	.000.	.0..0	0...0	.....	...0.	0....	.000.	0...0	0...0	..0.0	.....	.....	0...0	0.0..
	.....	.....	0...0	.0...	.000.	.....	...0.	.000.	0.0.0	0.000	0000.	.0.0.	00000	.....	000.0	0.0..
	.....	.....	0....	000..	0...0	.....	.....	0...0	0.0.0	00..0	0..0.	0.0..	0	.....	00.00	0.000
	.....	.....	0...0	.0...	0...0	.....	...0.	.000.	0.0.0	0.000	0...0	.0.0.	0	.....	000.0	000..
	.....	.....	.000.	.0...	.000.	.....	...0.	0	.000.	0...0	..0..	..0.0	.....	.....	00.00	0.0..
	.....	.....	..0..	00000	0...0	.....	...0.	0000.	.0...	.000.	.0...	.....	.....	.....	.000.	0.000
B0H	..0..	..0..	.00..	000..	..0..	.....	.0000	.....	.....	..0..	.....	.....	0...0	0...0	00...	.....
	.0.0.	..0..	0..0.	...0.	.0...	.....	0.0.0	.....	...0.	.00..	0..00	0.0..	0..0.	.0.0.	.0..0	00.0.
	..0..	00000	..0..	000..	.....	0..0.	0.0.0	.....	.000.	..0..	.00..	.0.0.	0.0..	0.0..	00.0.	..0.0
	.....	..0..	.0...	...0.	.....	0..0.	.00.0	..00.	0.0.0	..0..	.0...	..0.0	.0.0.	.000.	.00.0	.0000
	.....	..0..	0000.	000..	.....	0..0.	..0.0	..00.	0.0.0	.000.	.0...	.0.0.	00.0.	0...0	000.0	0.0..
	.....	.....	.....	.....	.....	000.0	..0.0	.....	.000.	.....	...0.	0.0..	.0000	..00.	0.000	00.00
	.....	00000	.....	.....	.....	0....	..0.0	.....	.0...	.....	..0..	.....	...0.	.0000	0	.....
C0H	..0..	.000.	00000	..0..	0...0	..0..	00000	00000	.0.0.	...0.	...0.	..0..	.0000	0..0.	00000	0....
	.0.0.	..0..	.....	.0...	.....	.0.0.	0....	.....	..0..	..0..	..0..	.....	0....	0.0..	.....	0....
	0...0	..0..	..0..	.0000	..0..	..0..	0000.	00000	.000.	00000	00000	00000	0.000	000..	.000.	0....
	00000	..0..	.0.0.	0....	.0.0.	.0.0.	0....	0....	0...0	0....	...0.	0....	0...0	0..0.	..0..	0....
	0...0	.000.	0...0	0....	0...0	0...0	00000	0000.	0....	0000.	..0..	0000.	.000.	0...0	..0..	00000
	..0..	..0..	00000	0....	00000	00000	..0..	0....	0...0	0....	.0...	0....	..0..	..0..	..0..	..0..
	...0.	...0.	0...0	.0000	0...0	0...0	...0.	00000	.000.	00000	00000	00000	.0...	.0...	.000.	.0...
D0H	.0.0.	...0.	0...0	..0..	00000	.00.0	.0.0.	.....	0...0	.0...	...0.	00000	.0.0.	..0..	.0.0.	.000.
	..0..	..0..	00..0	.0...	.....	0.00.	.....	0...0	0...0	.0...	..0..	.....	.....	.....	..0..	0...0
	.0000	0...0	0.0.0	.000.	.000.	.000.	.000.	.0.0.	0...0	.00..	.0000	0...0	0...0	00000	00000	0...0
	0....	00..0	0..00	0...0	0...0	0...0	0...0	..0..	0...0	.0...	0....	0...0	0...0	...0.	...0.	0.00.
	.000.	0.0.0	0...0	0...0	0...0	0...0	0...0	.0.0.	.000.	00...	.000.	0...0	0...0	..0..	..0..	0...0
	0	0..00	..0..	0...0	0...0	0...0	0...0	0...0	..0..	.0...	0	0...0	0...0	.0...	.0...	0...0
	0000.	0...0	.0...	.000.	.000.	.000.	.000.	.....	...0.	.0000	0000.	.000.	.000.	00000	00000	0.00.
E0H	.000.	..0..	00000	...0.	.0.0.	..0..	.000.	00000	.0.0.	...0.	...0.	..0..	..0..	0....	00000	.00..
	0	.....	.....	..0..	.....	.0.0.	0...0	.....	..0..	..0..	..0..	.....	...0.	0..0.	.....	..0..
	.0000	.00..	.000.	.....	.000.	.000.	00000	.000.	.....	.000.	.....	.000.	.0000	0.0..	.00..	..0..
	0...0	..0..	0	.0000	0	0	0....	0...0	.0000	0...0	00000	0...0	0...0	000..	..0..	..0..
	.0000	.000.	.0000	0....	.0000	.0000	.0000	00000	0....	00000	...0.	00000	.0000	0..0.	..0..	.000.
	..0..	..0..	0...0	0....	0...0	0...0	..0..	0....	0....	0....	..0..	0....	0	..0..	..0..	..0..
	...0.	...0.	.0000	.0000	.0000	.0000	...0.	.0000	.0000	.0000	00000	.0000	0000.	.0...	.000.	.0...
F0H	.0.0.	..0..	0.00.	.....	.....	.00.0	.0.0.	.....	0...0	.00..	..0..	00000	.0.0.	.....	.0.0.	.....
	..0..	.0...	00..0	..0..	00000	0.00.	.....	..0..	0...0	..0..	.0...	.....	.....	..0..	..0..	..0..
	.000.	0.00.	0...0	.0...	.....	.....	.....	.....	0..00	..00.	.000.	0...0	0...0	.....	.....	.....
	0....	00..0	0...0	.000.	.000.	.000.	.000.	00000	.00.0	..0..	0....	0...0	0...0	00000	00000	.....
	.00..	0...0	0...0	0...0	0...0	0...0	0...0	.....	.....	.00..	.00..	0...0	0...0	...0.	...0.	.....
	...0.	0...0	..0..	0...0	0...0	0...0	0...0	..0..	..0..	..0..	...0.	0..00	0..00	..0..	..0..	.....
	000..	0...0	.0...	.000.	.000.	.000.	.000.	.....	...0.	.000.	000..	.00.0	.00.0	00000	00000	.....

6.2.13 Page 64 (ISO8859-7) (80H – FFH)

	00	01	02	03	04	05	06	07	08	09	0A	0B	0C	0D	0E	0F
80H	..00. .0..0 000.. .0... 000.. .0..0 ..00.	....	....	....	....	....	....	....	....	....	....	....	....	....	....	....
90H	....	....	....	....	....	....	....	....	....	....	....	....	....	....	....	....
A0H	....	...0. ..0.. ..00.	..00. ...0. ..0..	..00. .0..0 .0... 000.. .0... .0... 00000	....	....	..0.. ..0.. ..0.. ..0.. ..0.. ..0.. ..0..	.000. 0.... .000. 0...0 .000. ....0 .000.	..... .0.0.	.000. 0...0 0.000 00..0 0.000 0...0 .000.	....	...0. ..0.0 .0.0. 0.0.. .0.0. ..0.0 ...0.	.... 00000 ....0	....	....	0.... .0... ..0.. ...0. 00000 00000
B0H	.000. 0...0 .000.	..0.. 00000 ..0.. ..... 00000	..00. .0..0 ...0. ..0.. .0000	..00. .0..0 ...0. .0..0 ..00.	..... .000. .0...	....	0.... ..00. .0..0 .0..0 .0..0 .0..0 .0..0	..... .000. 00000 00000 00000 .000.	0.... ..... .0000 .0... .0... .0... .0000	0.... 0.... .0..0 .0..0 .0..0 .0..0 .0000	0.... ..000 ...0. ...0. ...0. ...0. ..000	.0... 0.0.. 0.0.0 .0.0. 0.0.. 0.0.. .0...	0.... ..00. .0.0. .0..0 .0..0 .0..0 ..00.	0...0 0..0. 0..0. .000. 00..0 00..0 .0000	0.... .0.00 .000. ..0.. ..0.. ..0.. ..0..	0.... .000 0...0 0...0 0...0 .0.0. 00.00
C0H	.000. ....0.. ..0.. ..0.. ..0.0 ...0.	.000. 0...0 0...0 0...0 00000 0...0 0...0	0000. 0...0 0...0 0000. 0...0 0...0 0000.	00000 0.... 0.... 0.... 0.... 0.... 0....	..0.. .0.0. .0.0. 0000. 0...0 0...0 00000	00000 0.... 0.... 0000. 0.... 0.... 00000	00000 ....0 ...0. ..0.. .0... 0.... 00000	0...0 0...0 0...0 00000 0...0 0...0 0...0	.000. 0...0 0...0 00000 0...0 0...0 .000.	.000. ..0.. ..0.. ..0.. ..0.. ..0.. .000.	0...0 0..0. 0..0. 00... 0.0.. 0.0.. 0...0	..0.. .0.0. .0.0. 0...0 0...0 0...0 0...0	0...0 00.00 0.0.0 0.0.0 0...0 0...0 0...0	0...0 ..... 00..0 0.0.0 0..00 0...0 0...0	00000 .... .000. 00000	.000. 0...0 0...0 0...0 0...0 0...0 .000.
D0H	00000 .0.0. .0.0. .0.0. .0.0. .0.0. .0.0.	0000. 0...0 0...0 0000. 0.... 0.... 0....	....	00000 0.... .0... ..0.. .0... 0.... 00000	00000 ..0.. ..0.. ..0.. ..0.. ..0.. ..0..	..... 00.00 ..0.. ..0.. ..0.. ..0.. ..0..	..0.. .000. 0.0.0 0.0.0 0.0.0 .000. ..0..	0...0 0...0 .0.0. ..0.. ..0.. 0...0 0...0	0.0.0 0.0.0 .000. 0.0.0 0.0.0 ..0.. .000.	.000. 0...0 0...0 0...0 0...0 .000. 00.00	.0.0. ....0.. ..0.. ..0.. ..0.. ..0..	.0.0. ..... 0...0 0...0 0...0 ..0.. ..0..	..0.. .0... 0..0. 0..0. 0..0. 0..0. .00.0	..0.. .0... ....0 0..0. 0..0. 0.... 00000	.0... 0.... 00000 0.... 0...0 0.... 0	..0.. .0... ..00. .0..0 0000. ....0 ..0..
E0H	..0.. 0...0 ..... 0...0 0...0 0...0 .000.	....0 .000. 0..0. 0..0. 0..0. .00.0	..00. .0..0 .000. ..0.. .0..0 .0..0 00...	.... 00..0 ..00. ..0.. ..0.. ..0..	.0000 0.... .0000 .000. 0...0 0...0 .000.	.... 0.... 0.... 00000 0.... .0000	00000 ...0. ..0.. .0... .0... ..000 ...0.	..... 0...0 0.00. 00..0 0...0 0...0 0	.000. 0...0 0...0 000.0 ....0 0...0 .000.	....0.. ..0.. ..0.. ..0.. ..0.. ...0.	.... 0...0 0..0. 000.. 0..0. 0...0	..... .0... 0..0. 0..0. ..0.. 0..0. 0.... .0...	..... 0..0. 0..0. 0..0. 000.0 0..0. 0.... .0...	..... 0..0. 0...0 0...0 0..0. 0...0 0.... .0...	0000. ..0.. .0... 0000. 0..0. 0...0 .00.. 0000.	.... .000. 0...0 0...0 0...0 0...0 .000.
F0H	.... 00000 .0.0. .0.0. .0.0. 0..0.	..... .000. .000. 0...0 00..0 0.00. 0....	.... 0...0 0.... .00.. ...0. ..00.	.... .0000 0.0.. 0..0. 0..0. .00..	.... 00000 .0... .0... .0... ..00.	.... 0...0 0...0 0...0 0...0 .000.	..0.. .000. 0.0.0 0.0.0 0.0.0 .000. ..0..	.... 0...0 .0.0. ..0.. .0.0. 0...0	..0.. ..0.. 0.0.0 0.0.0 0.0.0 .000. ..0..	.... 0.0.0 0.0.0 0.0.0 .000.	....0.. ..0.. 0...0 ..0..	.... .0.0. ..... 0...0 0...0 0...0 .000.	...0. .0.0. .000. .000. 0...0 0...0 .000.	...0. ..0.. ..... .000. 0...0 0...0 .000.	...0. ..0.. .... 0...0 0.0.0 .000.	....

6.2.14 Page 66 (PC857: Turkish) (80H – FFH)

	00	01	02	03	04	05	06	07	08	09	0A	0B	0C	0D	0E	0F
80H	.000. 0...0 0.... 0...0 .000. ..0.. 000..	.0.0. ..... 0...0 0...0 0...0 0..00 .00.0	...0. ..0.. .000. 0...0 00000 0.... .000.	..0.. .0.0. .000. 0...0 .0000 0...0 .0000	.0.0. ..... .000. 0...0 .0000 0...0 .0000	.0... ..0.. .000. 0...0 .0000 0...0 .0000	.000. .0.0. .000. 0...0 .0000 0...0 .000.	..... .0000 0.... 0...0 .0000 ...0. .000.	..0.. 0.0. .000. 0...0 0...0 0.... .000.	.0.0. ..... .000. 0...0 00000 0.... .000.	.0... ..0.. .000. 0...0 00000 0.... .000.	..... 0.0. ..... 0...0 .00.. ..0.. .000.	..0.. .0.0. ..... .00.. ..0.. ..0.. .000.	.... .00.. ..0.. ..0.. .000.	.0.0. ..0.. .0.0. 0...0 00000 0...0 0...0	.000. .0.0. .000. 0...0 00000 0...0 0...0
90H	...0. ..0.. 00000 0.... 0000. 0.... 00000	.... 00.0. ..0.0 .0000 0.0.. .0000	..000 .0.0. 0..0. 0..00 0000. 0..0. 0..00	..0.. .0.0. 0..0. .000. 0...0 0...0 .000.	.0.0. ..... 0..0. .000. 0...0 0...0 .000.	.0... ..0.. 0..0. .000. 0...0 0...0 .000.	..0.. .0.0. 0..00 0...0 0...0 0..00 .00.0	.0... ..0.. 0..00 0...0 0...0 0...0 .00.0	..0.. ....0.. ..0.. ..0.. .000.	.0.0. ..... .000. 0...0 0...0 0...0 .000.	.0.0. ..... 0...0 0...0 0...0 0...0 .000.	....0 0.0.0 0.0.0 0.0.0 .000. 0....	..00. .0..0 .0... 0000. .0... .0... 00000	....0 .000. 0.0.0 0.0.0 .0.0.0 0000. 0....	.0000 0.... .000. 0000. 0000. .000. .00..	.000. 0.... .00.. ...0. 000.. ..0.. .00..
A0H	...0. ..0.. .000. ....0 .0000 0...0 .0000	...0. ..0.. ..... .00.. ..0.. ..0.. .000.	...0. ..0.. ..... .000. 0...0 0...0 .000.	...0. ..0.. 0...0 0...0 0..00 0..00 .00.0	.0..0 0.00. ..... 0.0.0 00..0 0...0 0...0	.0..0 0.00. ..... 00..0 0.0.0 0..00 0...0	.0.0. ..0.. .000. 0.... 0.000 0...0 .000.	.0.0. ..0.. .0000 0...0 .0000 ....0 0000.	..0.. ....0.. .0... 0...0 0...0 .000.	.000. 000.0 00.00 000.0 000.0 00.00 .000.	.... 00000 ....0 ....0 ..... .000.	0..0. 0.0.. 00... 0.00. 0..0. ...0. .0000	0...0 0..0. 0.0.0 .0.00 0.0.0 .0000 0	..0.. ....0.. ..0.. ..0.. ..0..	.... .0.0. 0.0.. .0.0. 0.0.. ....0.0 .0.0. ..0.0 0.0.. ....